Performance comparison of CAC schemes using limited access probability in two-type traffic environments

A. Bukkonprasert, C. Aswakul and L. Wuttisittikulkij
Department of Electrical Engineering, Faculty of Engineering
Chulalongkorn University, Bangkok, Thailand 10330
Tel. +662 2186908 Fax. +662 2186912
Email: akaradeach.b@student.chula.ac.th, chaodit.a@chula.ac.th, wlunchak@chula.ac.th

***Abstract*— This paper presents a new call admission control (CAC) scheme that can be used for traffic prioritisation in multiservice systems. The aim is to maximise the link utilisation while maintaining the quality of service (QoS) at a desired level. To achieve a prior setting for call blocking probability ratios, a more precise and flexible approach than conventional CAC schemes are proposed by using the concept of limited access probability. Three schemes of the proposed CAC are investigated, namely (i) Fixed Limited Access Probability (FLAP), (ii) State Dependent Limited Access Probability (SDLAP) and (iii) Occupancy Dependent Limited Access Probability (ODLAP). The performance of proposed CAC is analytically derived and also compared with discrete event simulation. The results in this paper considering two traffic-type scenarios indicate that the proposed schemes are able to achieve high system utilisation while satisfying any desired level of blocking probability ratio.**

***Keywords*— Call admission control, multiservice, prioritisation, blocking probability ratio.**

1. Introduction

Future broadband networks are expected to support a wide variety of services and applications, while quality of service (QoS) requirements with possibly very different characteristics must be satisfied. To realise that expectation, call admission control (CAC) is an indispensable network mechanism which aims at controlling QoS at the time scale of call level and providing different priority for each service. Service prioritisation is especially useful in preventing some service from monopolising over all resources of the system, which may lead to poor link utilisation and poor benefits in return. The challenge is to control a possible vast range of desired QoS levels. In this paper, a QoS level is identified by the resultant call blocking probability of different call traffics.

In the literature, several CAC schemes have been proposed such as complete partitioning [1], coordinate convex [2] and trunk reservation (e.g. [3]–[5]). Preceding studies [6] have shown that the trunk reservation techniques give a robust protection against traffic overloads and that the trunk reservation parameters are relatively traffic independent, i.e., the same values can be used in a large range of traffic load variations by assigning a distinct trunk reservation parameter for each service, a form of call blocking prioritisation can be achieved. However, it is not always possible to achieve a desired proportion of blocking probability. This inflexibility is inherently due to the fact that the obtained call blocking probability is not a continuous but step-like function of trunk reservation parameter as depicted in Figure 1. In order to enable the controlability of call blocking more precisely than that achievable by the trunk reservation while maintaining a high link utilisation, this paper proposes a new concept of CAC using the notion of limited access probability.

This work was financially supported by the research grant provided by the Office of Academic Affairs, Chulalongkorn University, Thailand.

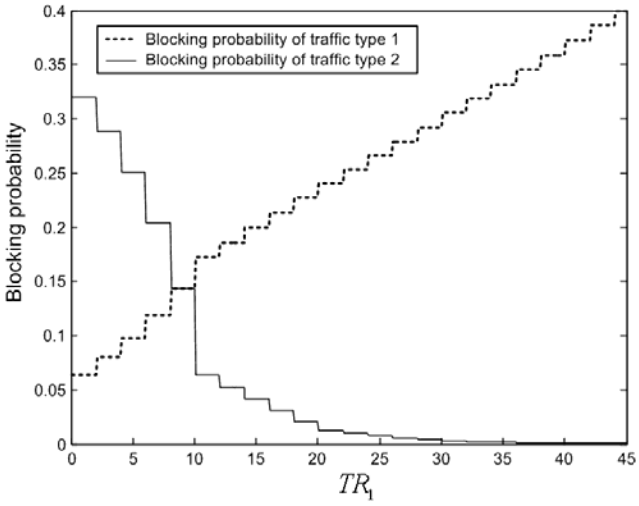

Figure 1. Call blocking probability as discrete function of TR_1 parameter with two traffic types when $C = 150$ Mbps, $G_1(n_1) = 2n_1$ Mbps, $G_2(n_2) = 10n_2$ Mbps, $\rho_1 = 60$ Erlang and $\rho_2 = 3$ Erlang.

The remainder of this paper is organised as follows. Section 2 provides a description of the considered system. CAC using limited access probability is introduced in Section 3, which contains three approaches: (i) Fixed Limited Access Probability (FLAP), (ii) State Dependent Limited Access Probability (SDLAP) and (iii) Occupancy Dependent Limited Access Probability (ODLAP). Section 4 discusses some numerical and simulation experiments. Finally, Section 5 concludes all research findings.

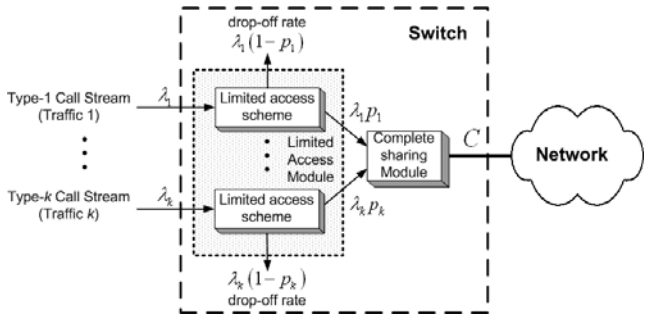

Figure 2. Single link system with CAC using limited access probability

2. Problem Formulation

The system considered in this paper is depicted in Figure 2. This system is an isolated link being accessed by k traffic types. Let C denote the link capacity and i be the index of traffic type ($i = 1, \ldots, k$). Let $G_i(\cdot)$ denote the equivalent capacity function of type-i traffic. That is, n_i connections of type i require the link capacity of magnitude $G_i(n_i)$. Specifically, an equivalent capacity function defines the relationship between the number of connections n_i and the minimum amount of link capacity needed to guarantee that all QoS requirements at the time scale of packets are met [7]–[10]. In practice, there are many methodologies whereby an equivalent capacity function for a certain traffic type can be obtained such as analytical, discrete event simulation, on-line measurement or even subjective tests [11]. By using equivalent capacity function, we can formulate a link-state vector of single-link system defined by $\mathbf{n} \triangleq (n_1, \ldots, n_k)$ and easily set a constraint to accept or reject calls. In this approach, call acceptance decisions are based on a simple rule: a new call may be accepted only if sum of equivalent capacity of ongoing calls and a new call does not exceed the link capacity.

Type-i traffic arrive as an independent Poisson stream with mean rate λ_i and call holding times are independent of each other and independent of call arrivals. The holding times of type-i traffics are exponentially distributed with mean $1/\mu_i$. Let p_i denote *Limited Access Probability (LAP)* of type-i traffic. Specifically, a new call of type-i traffic is accepted with probability p_i, given that the remaining capacity is sufficient for the new call arrival. This LAP can define in different approach in order to utilise link capacity effectively.

3. Call Admission Control Using Limited Access Probability

LAP changes the decision criteria of CAC from a hard decision to a soft decision. The priority between traffic types can be distinguished by blocking probability ratios, defined by

$$\gamma_i \triangleq \frac{B_i}{B_k} \tag{1}$$

where traffic types $1, \ldots, k$ have a sorted priority in a descending order and type k is a benchmark traffic (with the largest priority). To achieve a desired γ_i while maximising the link utilisation in a wide range of traffic load and bandwidth requirements, an appropriate LAP value must be found. In this respect, three different approaches are proposed here.

3.1 Fixed Limited Access Probability (FLAP)

FLAP is the simplest approach to achieve a desired γ_i. In particular, p_i is defined as a constant value. To find an appropriate p_i, we first write the call blocking probability of traffic type i (B_i) as follows. System state $\mathbf{n}$ is defined by a set of state space S, where

$$S \triangleq \left\{ \mathbf{n} \in \mathcal{I}^k \;\middle|\; \sum_{i=1}^{k} G_i(n_i) \leq C \right\} \tag{2}$$

and $\mathcal{I}$ is the set of nonnegative integers. Let $N_i(t)$ be the number of type-i connections on the link at time t. Under the system assumptions in Section 2, the stochastic process $\{(N_1(t), \ldots, N_k(t), t \geq 0\}$ has a unique stationary distribution $\pi(\mathbf{n}) = \pi(n_1, \ldots, n_k)$, given by a product-form solution [12]

$$\pi(\mathbf{n}) = \begin{cases} \dfrac{1}{K(S)} \displaystyle\prod_{i=1}^{k} \frac{(p_i \rho_i)^{n_i}}{n_i!}, & \mathbf{n} \in S \\ 0, & \mathbf{n} \notin S \end{cases} \tag{3}$$

where $\rho_i = \lambda_i / \mu_i$ is the offered load of type-i traffics, and the normalisation constant $K(S)$ is given by

$$K(S) = \sum_{\mathbf{n} \in S} \left[\prod_{i=1}^{k} \frac{(p_i \rho_i)^{n_i}}{n_i!} \right] \tag{4}$$

Straightforward derivation then gives the probability of blocking type-i traffic:

$$B_i = 1 - p_i \frac{K(S_i)}{K(S)} \tag{5}$$

where the state space S_i is defined as

$$S_i \triangleq \{\mathbf{n} \in S \,|\, \mathbf{n} + \mathbf{e}_i \in S\} \tag{6}$$

and $\mathbf{e}_i$ is the k-dimensional vector consisting of only zeros except for a one in the i component. However, it is obvious that the numerical evaluation of these product-forms will become intractable for a large number of traffic types. To produce preliminary results, two-traffic cases are considered in this paper. In this respect, let $p_2 = 1$, that is type-2 traffic is allowed to access the whole link capacity. In order to find the appropriate value p_1 is directly obtained from combining (1) and (5):

$$\gamma_1 = \frac{K(S) - p_1 K(S_1)}{K(S) - K(S_2)} \tag{7}$$

3.2 State Dependent Limited Access Probability (SDLAP)

It is expected that limiting a new call access at a fixed probability might decrease the link utilisation. To avoid this problem, SDLAP is here proposed. Specifically, the call acceptance rate is limited as a linear function of the number of calls in the system beyond a given threshold. That is,

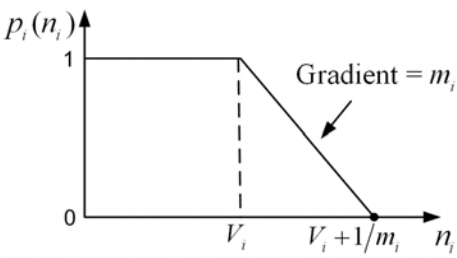

Figure 3. Characteristic of state dependent limited access probability $p_i(n_i)$ at specified (V_i, m_i)

limited access probability is $p_i(n_i)$ defined as a function of the number of connections in system,

$$p_i(n_i) = \begin{cases} 1\,, & \text{if } 0 \le n_i \le V_i \\ 1 - m_i(n_i - V_i)\,, & \text{if } V_i < n_i \le V_i + 1/m_i \\ 0\,, & \text{otherwise} \end{cases} \tag{8}$$

where $m_i \in [0, 1]$ is the gradient of linear function and $V_i \in \mathcal{I}$ is an adjustable threshold, as shown in Figure 3.

Finding the probability of blocking type-i traffic is similar to the case of FLAP, i.e.

$$\pi(\mathbf{n}) = \frac{1}{K(S)} \prod_{i=1}^{k} \left[\frac{\rho_i^{n_i}}{n_i!} \prod_{j=0}^{n_i-1} p_i(j) \right] \tag{9}$$

And the normalisation constant $K(S)$ can be written as

$$K(S) = \sum_{\mathbf{n} \in S} \prod_{i=1}^{k} \left[\frac{\rho_i^{n_i}}{n_i!} \prod_{j=0}^{n_i-1} p_i(j) \right] \tag{10}$$

then B_i can be calculated from

$$B_i = 1 - \sum_{\mathbf{n} \in S_i} p_i(n_i) \pi(\mathbf{n}) \tag{11}$$

For this scheme, we must search for V_i and m_i to satisfy γ_i for $i = 1, \ldots, k-1$. In case of two traffics, a simple numerical method such as the bisection or secant methods can be readily applied and have been used to produce all results in Section 4.

3.3 Occupancy Dependent Limited Access Probability (ODLAP)

ODLAP is proposed to improve the performance and robustness for CAC. In this respect, the limited access probability is defined as a function of link occupancy:

$$p_i(\mathbf{n}) = \begin{cases} \tilde{p}_i\,, & \text{if } \sum_{i=1}^{k} G_i(n_i) \ge C - TH_i \\ 1\,, & \text{otherwise} \end{cases} \tag{12}$$

where TH_i is a predefined threshold parameter for type-i traffic. Given (12), it can be shown that the stochastic process $N(t)$ is not reversible hence the product-form solution does not hold. An alternative method such as directly solving the global balance equations is thus here employed to find the stationary distribution $\pi(\mathbf{n})$. Given $\pi(\mathbf{n})$, the blocking probability B_i can then be computed from

$$B_i = \sum_{\{\mathbf{n} \in S | \mathbf{n} + \mathbf{e}_i \notin S\}} \pi(\mathbf{n}) + (1 - \tilde{p}_i) \sum_{\{\mathbf{n} \in T_i\}} \pi(\mathbf{n}) \tag{13}$$

where

$$T_i \triangleq \left\{ \mathbf{n} \in S_i \,\middle|\, \sum_{i=1}^{k} G_i(n_i) \ge C - TH_i \right\} \tag{14}$$

In two-traffic cases, traffic 2 is allowed to access the whole link capacity, i.e., $TH_2 = 0$ and calculation of $\tilde{p}_1$ and TH_1 can be achieved by the same methods as for SDLAP scheme.

4. Results and Discussions

All the three proposed CAC schemes using limited access probability have been evaluated in comparison to the conventional trunk reservation technique for two-traffic cases with a wide range of traffic loads and various desired levels of the blocking probability ratio γ_1. The link capacity is set at $C = 150$ Mbps and the equivalent capacity functions are given by $G_1(n_1) = 2n_1$ Mbps and $G_2(n_2) = 10n_2$ Mbps. In order to examine the impact to all CAC schemes from load variations, three different scenarios are investigated and results are depicted in Figures 4–6. For a clear comparison, these three investigations are conducted using the same overall normalised load of 100%, which is defined as $\rho_{ni} = G(\rho_i)/C \times 100$. In each scenario, the link utilisations from three CAC schemes using limited access probability are analytically evaluated and compared with the maximum link utilisation obtainable from the trunk reservation at the same γ_1. Simulation results are also presented with 95% confidence intervals. The maximum link utilisation from the trunk reservation is obtained by a direct searching of trunk reservation parameter within the range of 30% of the link capacity.

The results in Figures 4–6 indicate that the controllable ranges of γ_1 are quite different for all three traffic scenarios. For example, it is not easy to adjust γ_1 beyond 2.5 in Figure 5 but it is easy to control γ_1 up to 40 in Figure 6. This is because Figure 5 is the situation which the link is mostly occupied by type-2 traffic (high priority traffic) and type-1 traffic (low priority traffic) are ruled out from accessing the link completely. Nevertheless, it appears that the blocking of high priority traffic remains high. In Figure 6, it is the opposite condition to that of Figure 5. Type-2 traffic load is rather low, most capacity is utilised by type-1 traffic. Slight adjustment in limited access probability results to significant change of γ_1.

For the link utilisation, it is found that FLAP gives the lowest link utilisation. In FLAP scheme, calls are limited with the same probability. Consequently, unnecessary call rejections occur while link capacity is sufficient to serve a new call without violating the desired γ_1. The SDLAP scheme provides the better link utilisation because call admission is limited when the number of calls of type-1 traffic in the system is more than the threshold according to V_1 in (8). It means that calls are rejected by LAP when number of type-1 connections

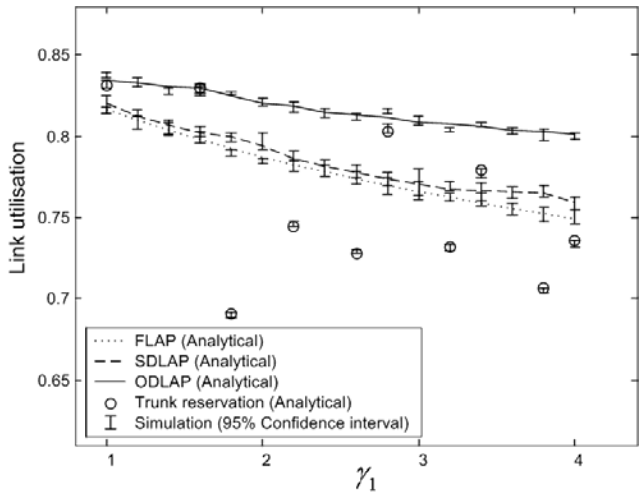

Figure 4. Link utilisation with $\rho_{n1} = 50\%$ and $\rho_{n2} = 50\%$

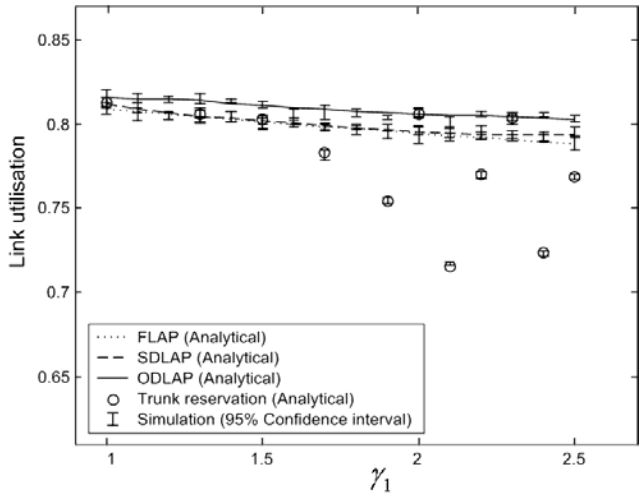

Figure 5. Link utilisation with $\rho_{n1} = 20\%$ and $\rho_{n2} = 80\%$

is higher than V_1. However, this condition does not give the maximum link utilisation because the threshold depends only on the number of type-1 connections. This condition does not imply that the new call is always rejected when the link capacity is highly occupied. According to (12), threshold of ODLAP scheme depends on link occupancy. Therefore, the ODLAP scheme gives a superior link utilisation. The robustness also appears if we look at the rate of change of link utilisation among the different traffic scenarios. The result suggests that ODLAP scheme can always give a good link utilisation in any blocking probability ratio and load. On the other hand, the link utilisation of FLAP and SDLAP scheme decreases rapidly in some load condition. However, in terms of computational complexity, FLAP is more attractive.

According to the results illustrated in Figures 4–6, for trunk reservation, the number of feasible values of γ_1 is limited; only certain values of γ_1 are achievable. For example, in case

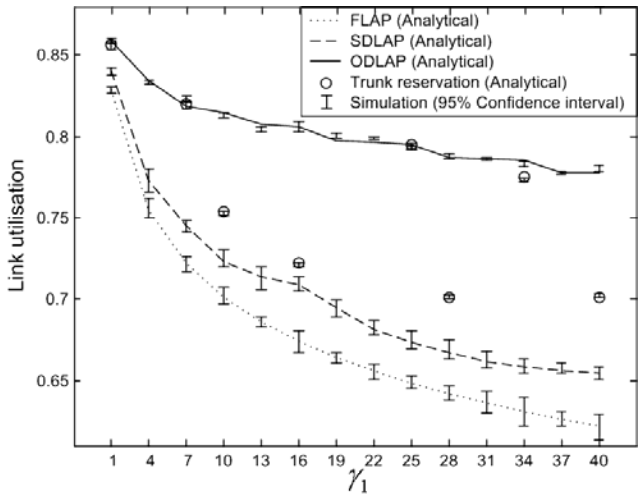

Figure 6. Link utilisation with $\rho_{n1} = 80\%$ and $\rho_{n2} = 20\%$

of $\rho_{n1} = 50\%$ and $\rho_{n2} = 50\%$, there are only a total of 10 achievable values of γ_1 over the range of $\gamma_1 = 1$ to 4, namely $\gamma_1 = 1, 1.6, 1.8, 2.2, 2.6, 2.8, 3.2, 3.4, 3.8$ and 4. This is as opposed to other proposed schemes where virtually any arbitrary value of γ_1 can be obtained over the same range. These results clearly confirm the controllability limit of existing CAC schemes which are based on hard-decision control mechanism. In addition, the relations of the link utilisation and the γ_1 of the trunk reservation appear rather unpredictable. Some values of γ_1 offer high levels of link utilisation whereas others may perform poorly. There clearly exists a wide range of link utilisation levels for different operating points of γ_1. It is also difficult to predict whether the link utilisation of the trunk reservation will be good or bad given a particular value of γ_1. This is in contrast to the other proposed schemes where the link utilisations tend to decrease monotonically as a function of γ_1. As a result, one may make decent and reasonable accurate estimates of the link utilisation for a given value of γ_1 from the existing results in Figures 4–6.

5. Conclusion

In this paper, three CAC schemes have been proposed by using limited access probability, namely Fixed Limited Access Probability (FLAP), State Dependent Limited Access Probability (SDLAP) and Occupancy Dependent Limited Access Probability (ODLAP). These CAC schemes give a higher flexibility in controls of call blocking than the previous schemes. The performance evaluation have been studied and compared with the conventional trunk reservation via both analytical and simulation approaches. The reported experiments show that the CAC schemes using limited access probability give relatively superior performance, which is at least as good as that obtained from the conventional trunk reservation. Further, it is found that the performance of these CAC schemes are sorted from ODLAP, SDLAP to FLAP in the descending order. The link utilisation obtained form ODLAP increases

more than 14% compared to that of FLAP and 11% compared to SDLAP. However, in terms of computational complexity, FLAP is more attractive.

References

[1] R. Bolla F. Davoli and M. Marchese, "Bandwidth allocation and admission control in ATM networks with service separation," *IEEE Commun. Mag.*, May 1997, pp. 130–137

[2] S. Jordan and H. Jiang, "Connection establishment in high-speed networks," *IEEE J. on Selected Areas in Commun.*, Vol. 13, No. 7, Sep. 1995, pp. 1150–1161.

[3] A. Gersht and K. J. Lee, "Virtual-circuit load control in fast packet-switched broadband networks," *Proc. GLOBECOM'88*, 1988, pp. 214–220.

[4] S. C. Borst and D. Mitra, "Virtual partitioning for robust resource sharing: computational techniques for heterogeneous traffic," *IEEE J. Selected Areas Commun.*, Vol. 16, Jun. 1998, pp. 668–678.

[5] C. Aswakul and J. Barria, "Analysis of dynamic service separation with trunk reservation policy," *IEE Proc. Commun.*, Vol. 149, No. 1, Feb. 2002, pp. 23–28.

[6] J. M. Akinpelu, "The overload performance of engineered networks with nonhierarchical and hierarchical routing," *AT & T Bell Lab. Tech. J.*, vol. 63, no. 7, Sep. 1984.

[7] R. Guérin, H. Ahmadi and M. Naghshineh, "Equivalent capacity and its application to bandwidth allocation in high-speed networks," *IEEE J. Selected Areas Commun.*, Vol. SAC-9, Sep. 1991, pp. 968–981.

[8] A. Elwalid and D. Mitra, "Effective bandwidth of general Markovian traffic sources and admission control of high speed networks," *Proc. INFOCOM '93*, Vol. 1 Mar. 1993, pp. 256–265.

[9] E. Gelenbe, X. Mang and R. Onvural, "Bandwidth allocation and call admission control in high-speed networks," *IEEE Commun. Mag.*, Vol. 35, May 1997, pp. 122–129.

[10] A. Szlavik, G. Seres, J. Zatonyi and J. Biro, "On the applicability of the on-off type approximation of the effective bandwidth function," *IEEE International Conference on ICC'03*, Vol. 1, 2003, pp. 183–187.

[11] K. W. Ross, *Multiservice loss models for broadband telecommunications networks*, London: Springer-Verlag, 1995.

[12] F. P. Kelly, *Reversibility and stochastic networks*, Chichester: Wiley, 1979.