5-5 Instantaneous Center of Zero Velocity

5.5 ICZV

1. Introduction

- For a moving body, *at each instant of time*, there is always a point with zero velocity.
- This point is called the Instantaneous Center of Zero Velocity or ICZV.

Examples:

A rotating link

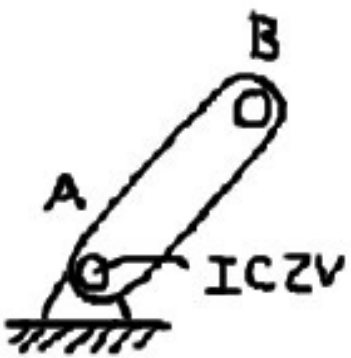

A train on a circular track

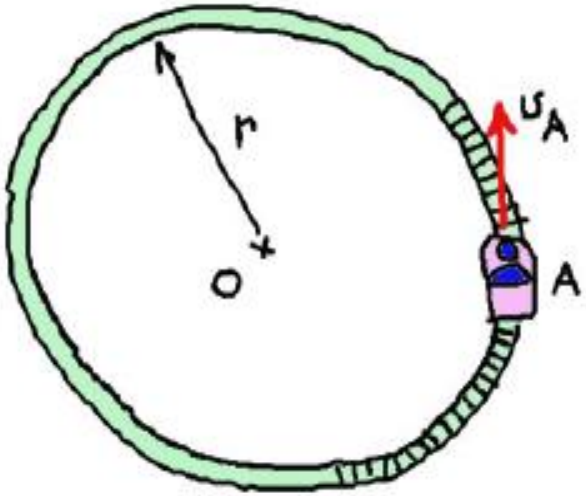

5.5 ICZV

1. Introduction

NOTES:

- ICZV is a point on the body that, at that instant, has zero velocity.
- ICZV may be on the body or anywhere else
- ICZV may be located at infinity.
- ICZV will usually not be the same point on the body all the time
- ICZV can be used to calculate velocity only.
- The body will appear to rotate about ICZV.
- Acceleration of the ICZV will not be zero.

5.5 ICZV

2. Locating ICZV

- 1. Fixed Axis Rotation

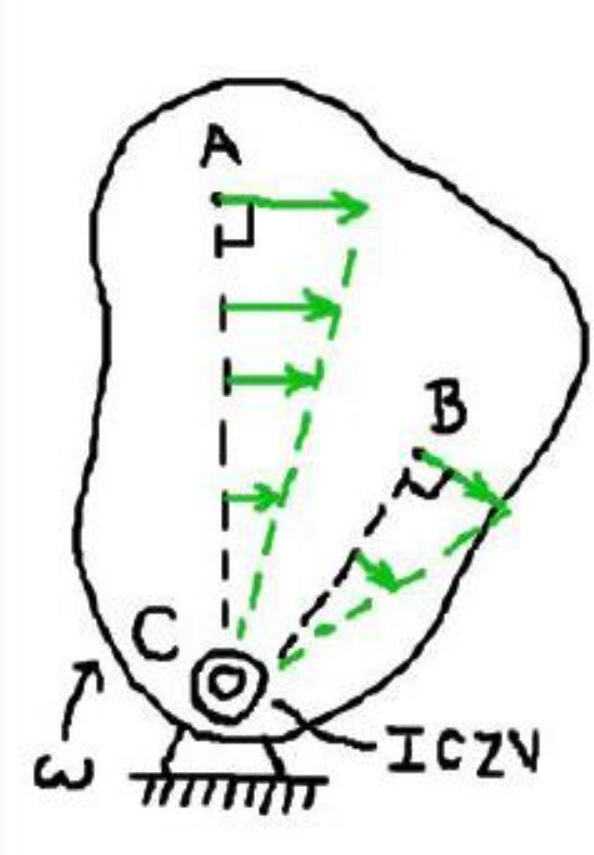

- Pure rotation, C = ICZV
- $\vec{v}_A = \vec{v}_C + \vec{v}_{A/C}$
- $\vec{v}_C = 0$
- $\vec{v}_{A/C} = \vec{\omega} \times \vec{r}_{C \to A}$
- $\vec{v}_A = \vec{\omega} \times \vec{r}_{C \to A}$
- ★ See that $\vec{v}_A$ must be $\perp$ to CA
- ★ See that v_A must be propotional to its distance from C

5.5 ICZV

2. Locating ICZV

- 2. General Plane Motion

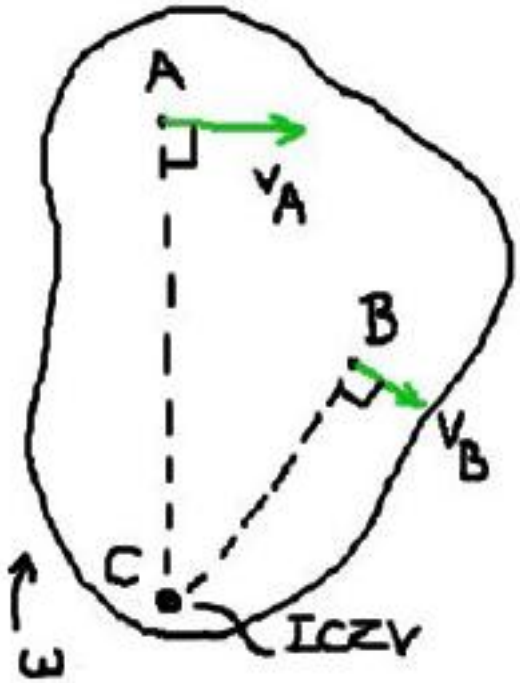

- Suppose, $\vec{v}_A$ and $\vec{v}_B$ are known
- Draw a line $\perp$ to $\vec{v}_A$ and $\vec{v}_B$ passing through A and B
- The intersection is ICZV.
- **At this instant**, the body is rotating around the ICZV.
- In general, $a_C \neq 0$
- C = ICZV
- $\vec{v}_A = \vec{v}_C + \vec{v}_{A/C}$
- $\vec{v}_C = 0$
- $\vec{v}_{A/C} = \vec{\omega} \times \vec{r}_{C \to A}$
- ★ $\vec{v}_A = \vec{\omega} \times \vec{r}_{C \to A}$
- ★ See that $\vec{v}_A$ must be $\perp$ to CA
- ★ See that v_A must be propotional to its distance from C

5.5 ICZV

2. Locating ICZV

- 2. General Plane Motion

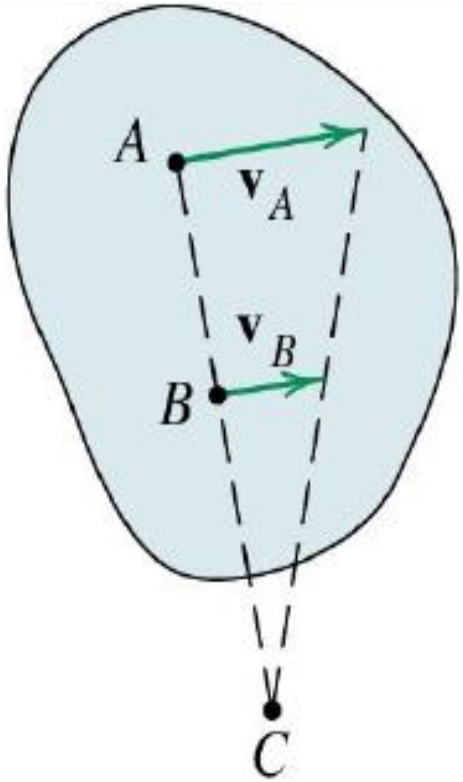

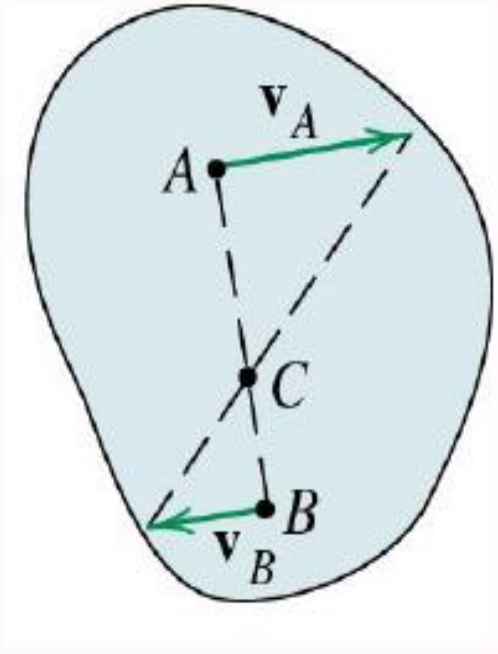

- If $\vec{v}_A = \vec{v}_B$ then ICZV is at ∞ (i.e., body in translation).

5.5 ICZV

Example 1: Find the ICZV's

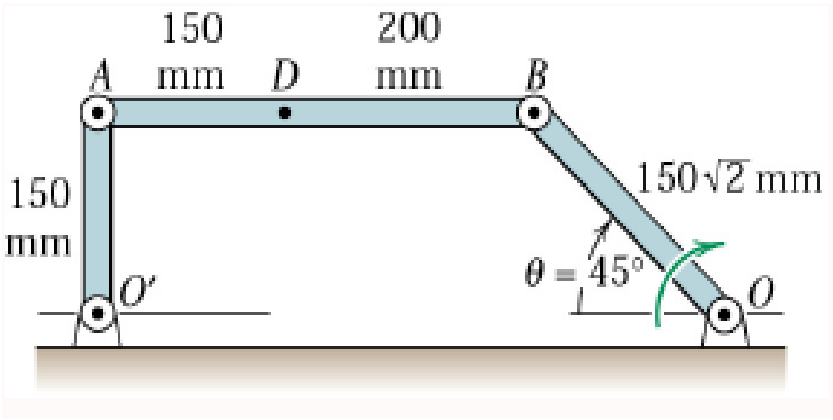

a)

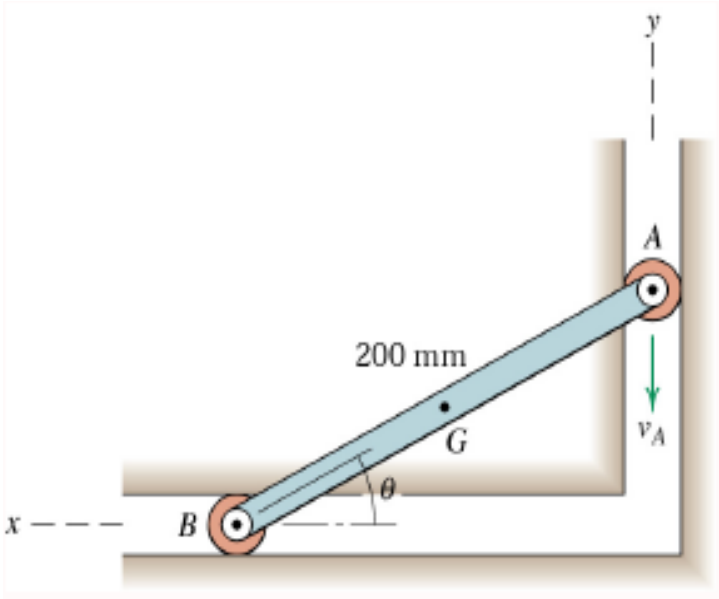

b)

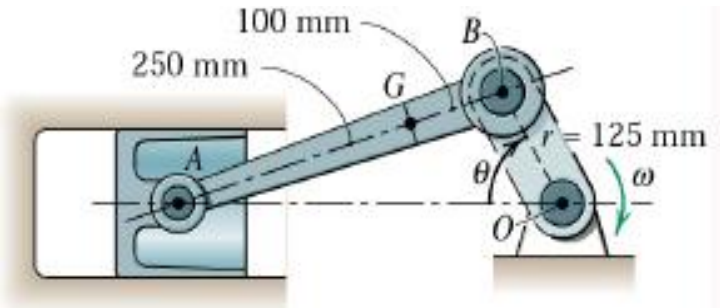

c)

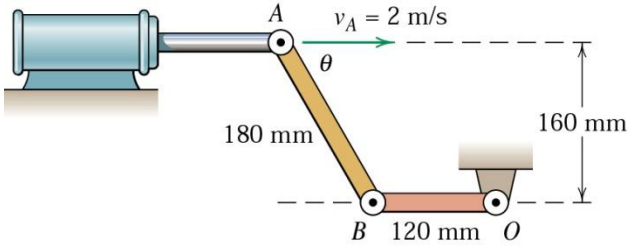

d)

5.5 ICZV

Example 2: Rolling Wheel

The wheel rolls to the right without slipping, with its center O having a velocity $v_O = 3$ m/s. Locate the instantaneous center of zero velocity and use it to find the velocity of point A for the position indicated.

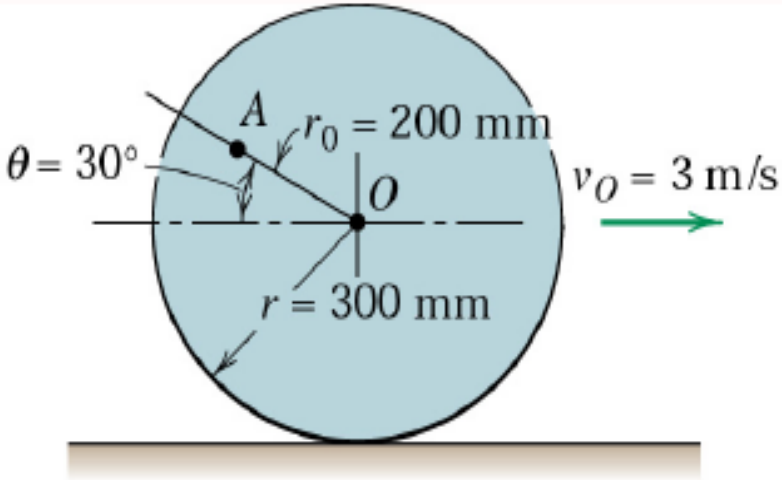

- Where is the ICZV?
- **Roll without slipping**, ICZV = point on the body that is in contact to the ground.
- Seen from the ground, the wheel is not rotating about the center point! But about the ICZV on the ground!

5.5 ICZV

Example 3: Four-Bar Linkage

Arm OB of the linkage has a clockwise angular velocity of 10 rad/s in the position shown where $\theta = 45°$. Determine the velocity of *A*, the velocity of *D*, and the angular velocity of link *AB* for the position shown.