2141-375
Measurement and Instrumentation

Analog Electrical Devices and Measurements

Analog Devices: Current Measurements

Force on a conductor

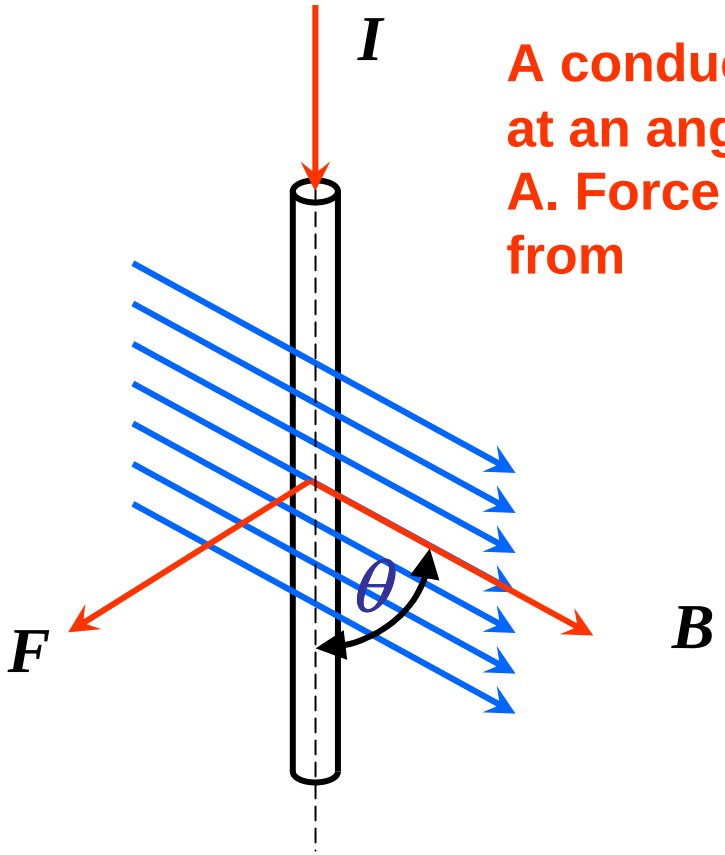

A conductor is placed in a uniform magnetic field B T, at an angle of θ. The current flow in the conductor is I A. Force exerted on the conductor can be calculated from

$$\vec{F} = I\vec{L} \times \vec{B}$$

$$F = ILB\sin\theta$$

Analog Devices: Current Measurements

Force on a conductor

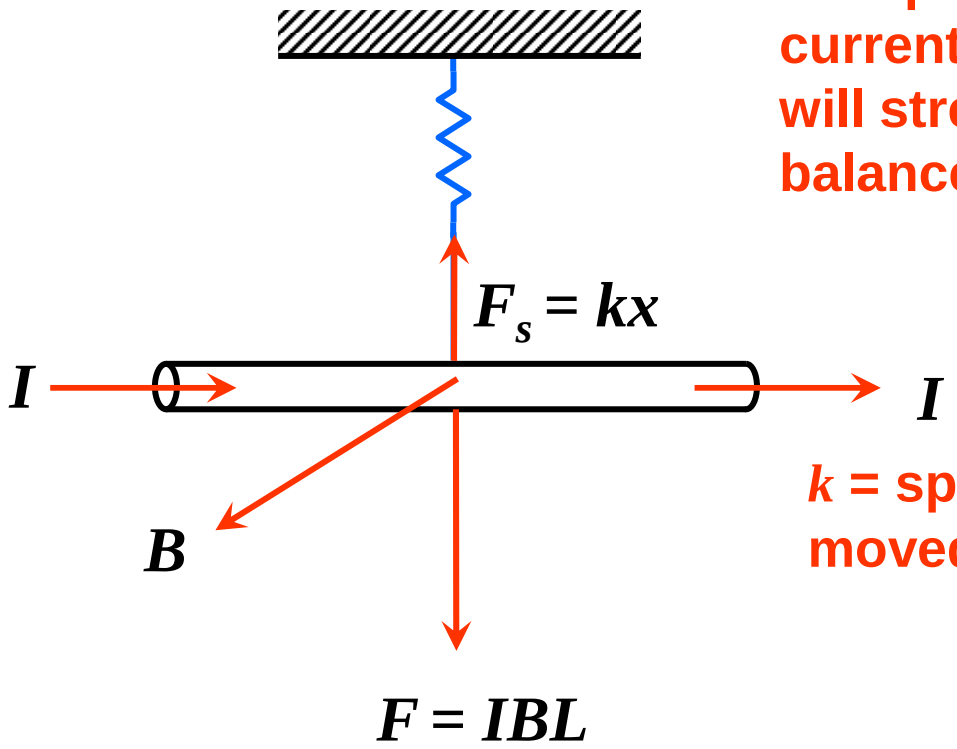

With no current flowing through the conductor, the spring will be at its unstretched length. As current flows through the conductor, the spring will stretch and developed force required to balance the electromagnetic force.

$$kx = ILB$$

k **= spring constant,** ***x*** **= the total distance moved by the spring and θ is 90°**

$$I = \frac{k}{BL}x$$

D'Arsonval or PMMC Instrument

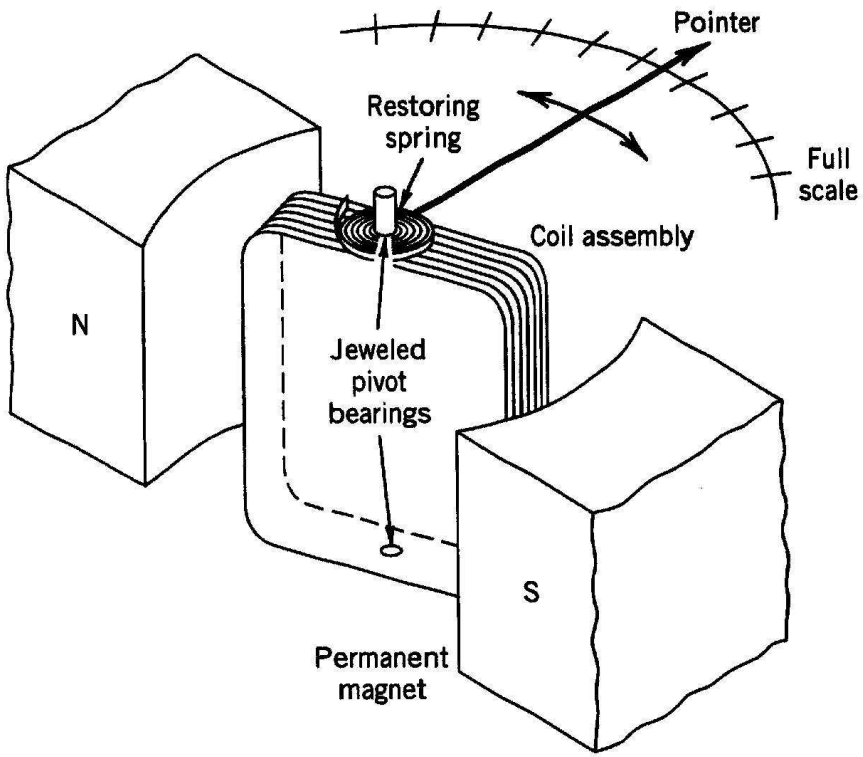

Figure 6.3 Basic D'Arsonval meter movement.

Important parts of PMMC Instrument

- **Permanent magnet with two soft-iron poles**
- **Moving coil**
- **Controlling or restoring spring**

PMMC = Permanent Magnet Moving Coil

Torque Equation and Scale

When a current I flows through a one-turn coil in a magnetic field , a force exerted on each side of the coil

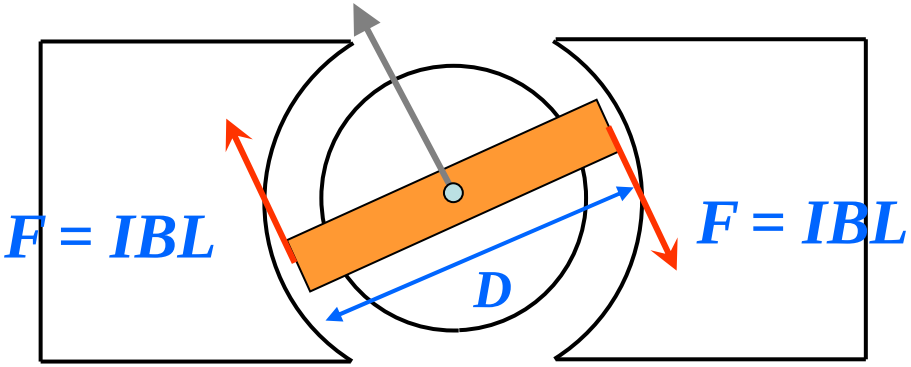

$$F = IBL$$

L = the length of coil perpendicular to the paper

Since the force acts on each side of the coil, the total force for a coil of N turns is

$$F = NIBL$$

The force on each side acts at a coil diameter D, producing a deflecting torque

$$T_D = NIBLD$$

Torque Equation and Scale

The controlling torque exerted by the spiral springs is proportional to the angle of deflection of the pointer:

$$T_C = K\theta$$

Where K = the spring constant. For a given deflection, the controlling and deflecting torques are equal

$$BLIND = K\theta$$

Since all quantities except θ and I are constant for any given instrument, the deflection angle is

$$\theta = CI$$

Therefore the pointer deflection is always proportional to the coil current. Consequently, the scale of the instrument is linear.

Galvanometer

- Galvanometer is essentially a PMMC instrument designed to be sensitive to extremely current levels.

- The simplest galvanometer is a very sensitive instrument with the type of center-zero scale, therefore the pointer can be deflected to either right or left of the zero position.

- The current sensitivity is stated in μA/mm

- Galvanometers are often used to detect zero current or voltage in a circuit rather than to measure the actual level of current or voltage. In this situation, the instrument is referred as a null detector.

DC Ammeter

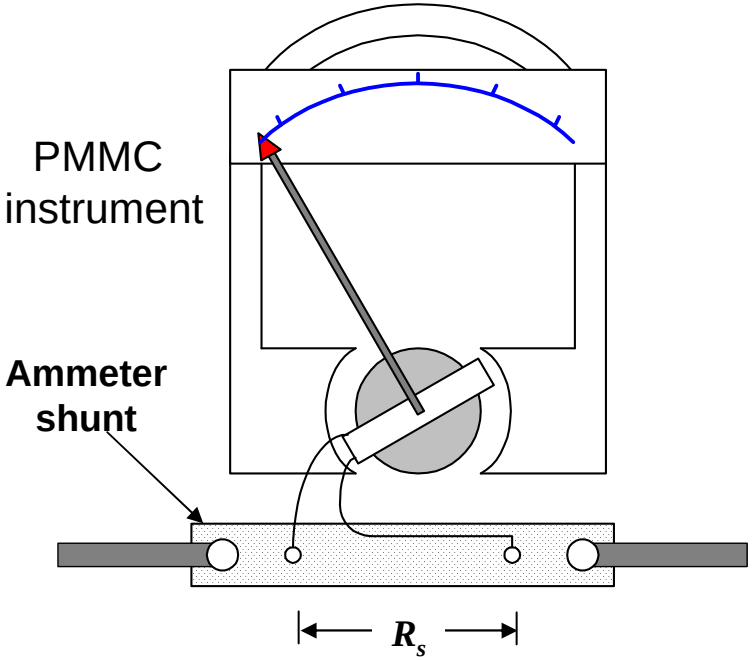

- An ammeter is always connected in series with a circuit.
- The internal resistance should be very low
- The pointer can be deflected by a very small current
- Extension of ranges of ammeter can be achieved by connecting a very low shunt resistor

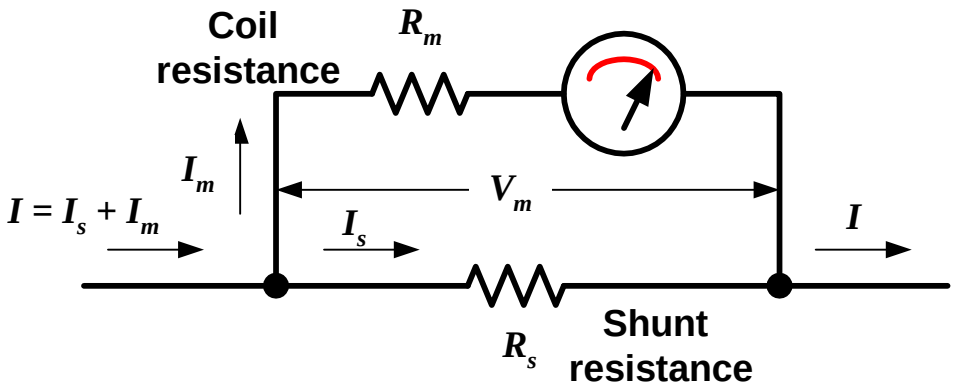

$$V_m = V_s \qquad I_m R_m = I_s R_s$$

$$R_s = \frac{I_m R_m}{I_s} \qquad R_s = \frac{I_m R_m}{I - I_m}$$

DC Ammeter

Example: An ammeter has a PMMC instrument with a coil resistance of R_m = 99 Ω and FSD current of 0.1 mA. Shunt resistance R_s = 1 Ω. Determine the total current passing through the ammeter at (a) FSD, (b) 0.5 FSD, and (c) 0.25 FSD.

Known: FSD of I_m R_m and R_s

Solution:

	FSD	0.5FSD	0.25FSD
I_m (mA)	0.1	0.05	0.025
I_s (mA)	9.9	4.95	2.475
$I = I_m + I_s$ (mA)	10	5	2.5

DC Ammeter

Example: A PMMC instrument has FSD of 100 μA and a coil resistance of 1kΩ. Calculate the required shunt resistance value to convert the instrument into an ammeter with (a) FSD = 100 mA and (b) FSD = 1 A.

Known: FSD of I_m R_m

Solution:

(a) FSD = 100 mA: R_s = 1.001 Ω

(b) FSD = 1 A: R_s = 0.10001 Ω

DC Ammeter: Multirange

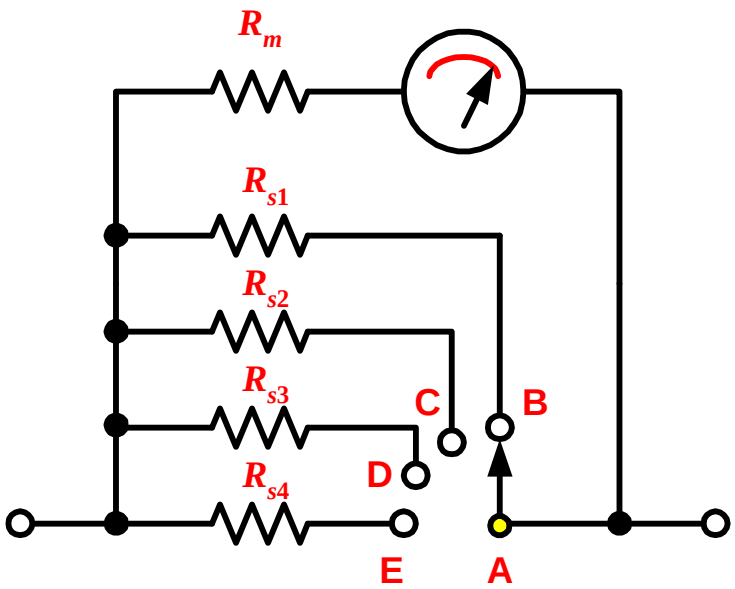

Multirange ammeter using switch shunts

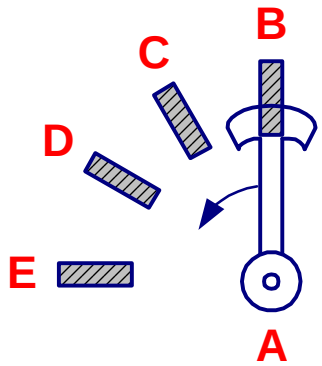

Make-before break switch

- A make-before-break must be used so that instrument is not left without a shunt in parallel to prevent a large current flow through ammeter.

DC Ammeter: Ayrton shunt

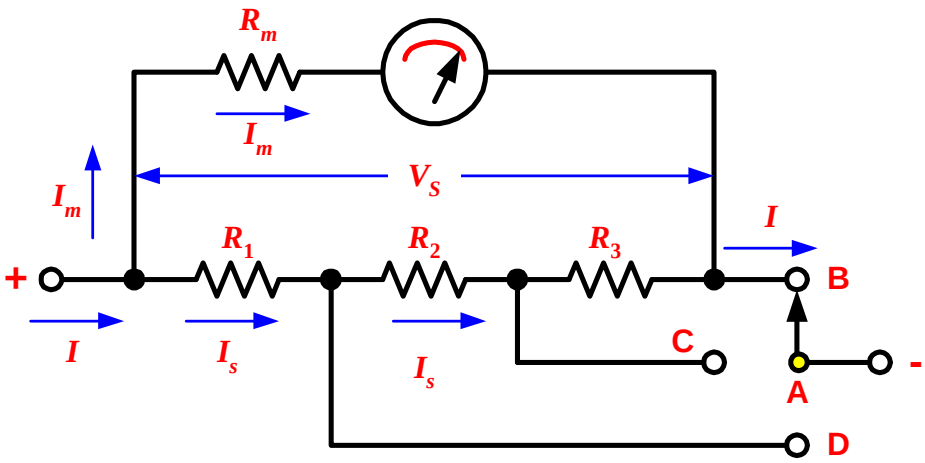

$R_1 + R_2 + R_3$ in parallel with R_m

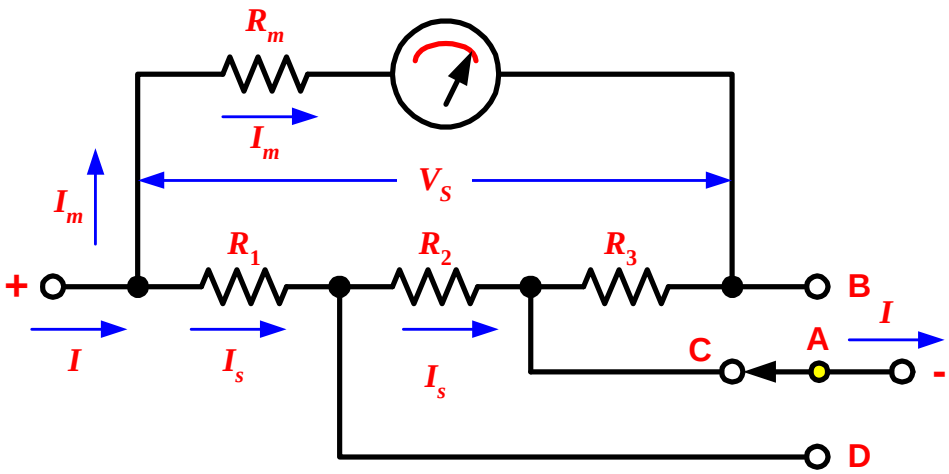

$R_1 + R_2$ in parallel with $R_m + R_3$

An Ayrton shunt used with an ammeter consists of several series-connected resistors all connected in parallel with the PMMC instrument. Range change is effected by switch between resistor junctions

DC Ammeter

Example: A PMMC instrument has a three-resistor Ayrton shunt connected across it to make an ammeter. The resistance values are R_1 = 0.05 Ω, R_2 = 0.45 Ω, and R_3 = 4.5 Ω . The meter has R_m = 1 kΩ and FSD = 50 μA. Calculate the three ranges of the ammeter.

Known: FSD of I_m R_m R_1 R_2 and R_3

Solution:

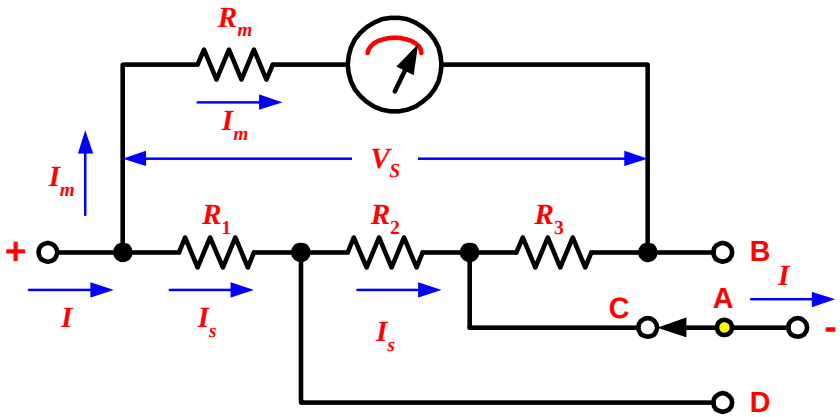

Position	B	C	D
I_{FSD} (mA)	10.05	100.05	1000.05

DC Voltmeter

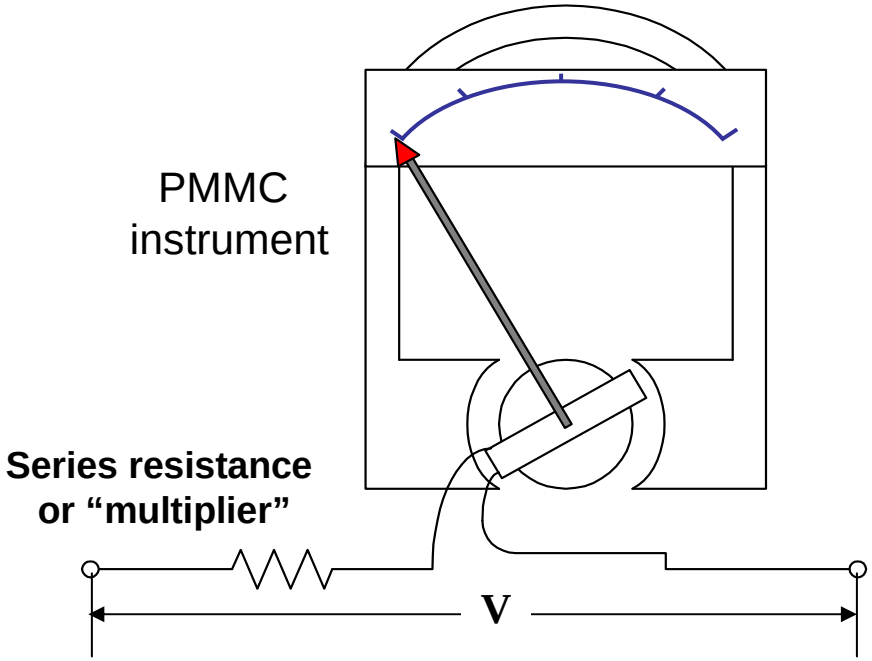

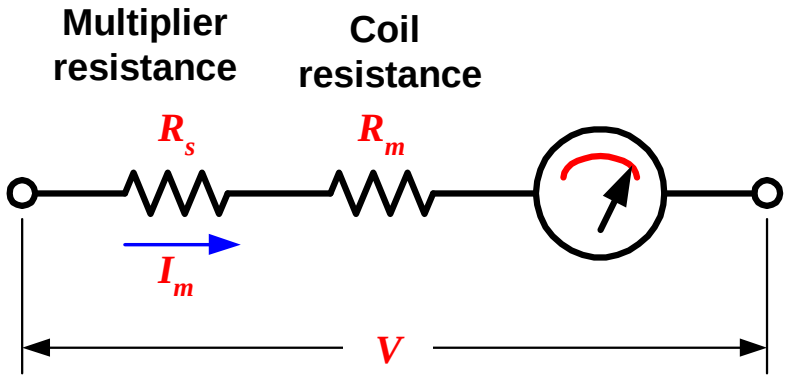

- An ammeter is always connected across or parallel with the points in a circuit at which the voltage is to be measured.
- The internal resistance should be very high

$$V = I_m R_s + I_m R_m \quad \Rightarrow \quad R_s = \frac{V}{I_m} - R_m$$

Given V = Range

$$R_s = \frac{Range}{I_m} - R_m$$

The reciprocal of full scale current is the voltmeter sensitivity (kΩ/V)

The total voltmeter resistance = Sensitivity X Range

DC Voltmeter: Multirange

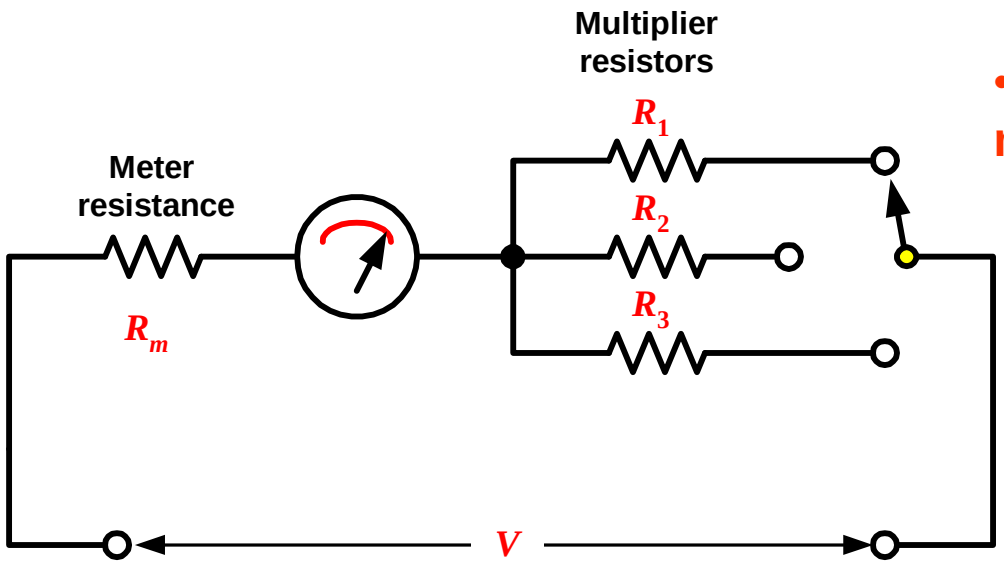

- **Multirange voltmeter using switched multiplier resistors**

$$V = I_m(R_m + R)$$

Where R can be R_1, R_2, or R_3

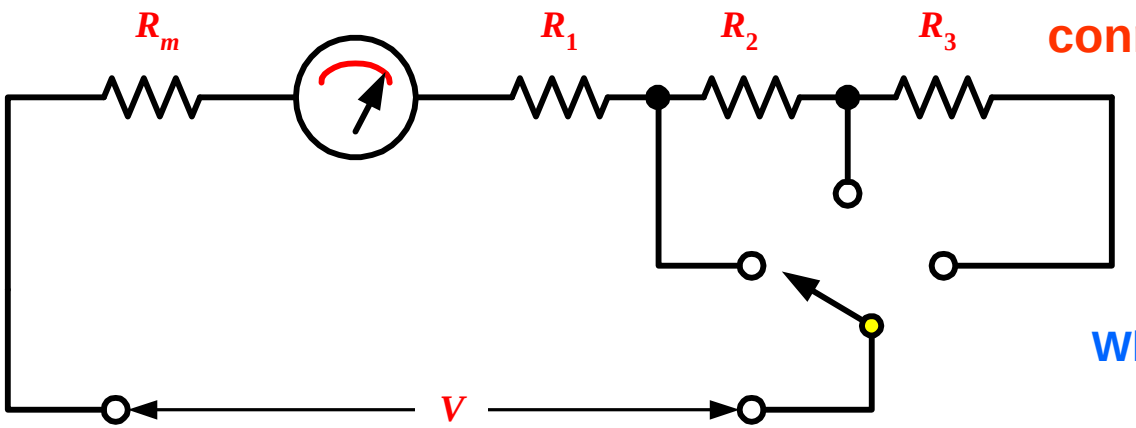

- **Multirange voltmeter using series-connected multiplier resistor**

$$V = I_m(R_m + R)$$

Where R can be R_1, $R_1 + R_2$, or $R_1 + R_2 + R_3$

DC Ammeter

Example: A PMMC instrument with FSD of 50 μA and a coil resistance of 1700 Ω is to be used as a voltmeter with ranges of 10 V, 50 V, and 100 V. Calculate the required values of multiplier resistor for the circuit (a) and (b)

Known: FSD of I_m R_m

Solution:

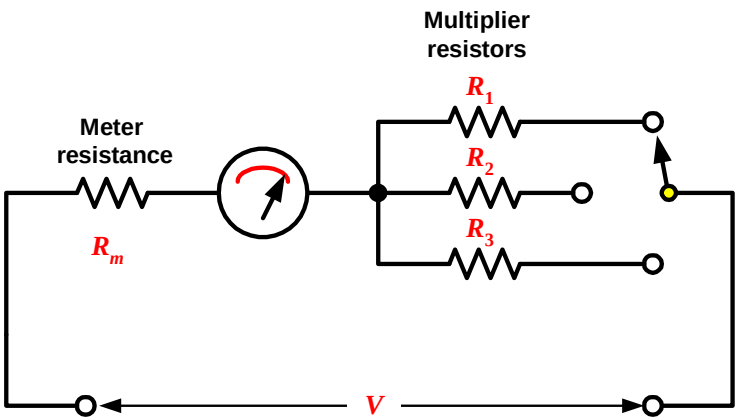

(a)

R_1	R_2	R_3
198.3 kΩ	998.3 kΩ	1.9983 MΩ

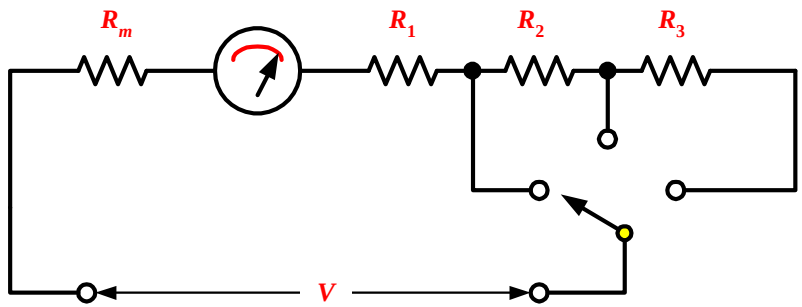

(b)

R_1	R_2	R_3
198.3 kΩ	800 kΩ	1 MΩ

Ohmmeter: Voltmeter-ammeter method

Pro and con:

- **Simple and theoretical oriented**
- **Requires two meter and calculations**
- **Subject to error: Voltage drop in ammeter (Fig. (a))**
  Current in voltmeter (Fig. (b))

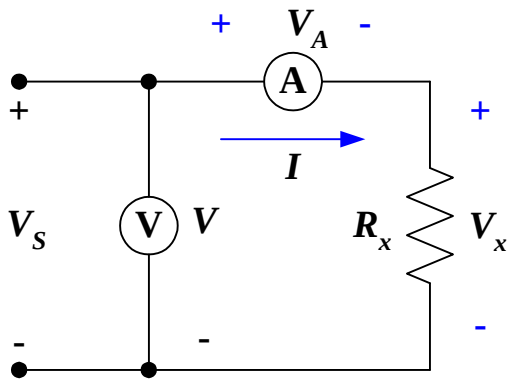

Fig. (a)

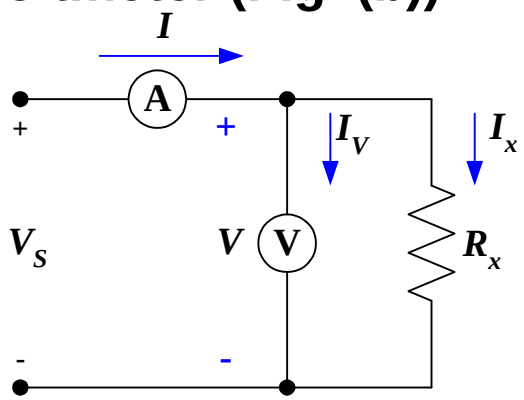

Fig. (b)

Measured R_x: $R_{\text{meas}} = \dfrac{V}{I} = \dfrac{V_x + V_A}{I} = R_x + \dfrac{V_A}{I}$

if $V_x >> V_A$ $\quad R_{\text{meas}} \approx R_x$

Therefore this circuit is suitable for measure large resistance

Measured R_x: $R_{\text{meas}} = \dfrac{V}{I} = \dfrac{V}{I_x + I_V} = \dfrac{R_x}{1 + I_V / I_x}$

if $I_x >> I_V$ $\quad R_{\text{meas}} \approx R_x$

Therefore this circuit is suitable for measure small resistance

Ohmmeter: Series Connection

- **Voltmeter-ammeter method is rarely used in practical applications (mostly used in Laboratory)**
- **Ohmmeter uses only one meter by keeping one parameter constant**

Example: series ohmmeter

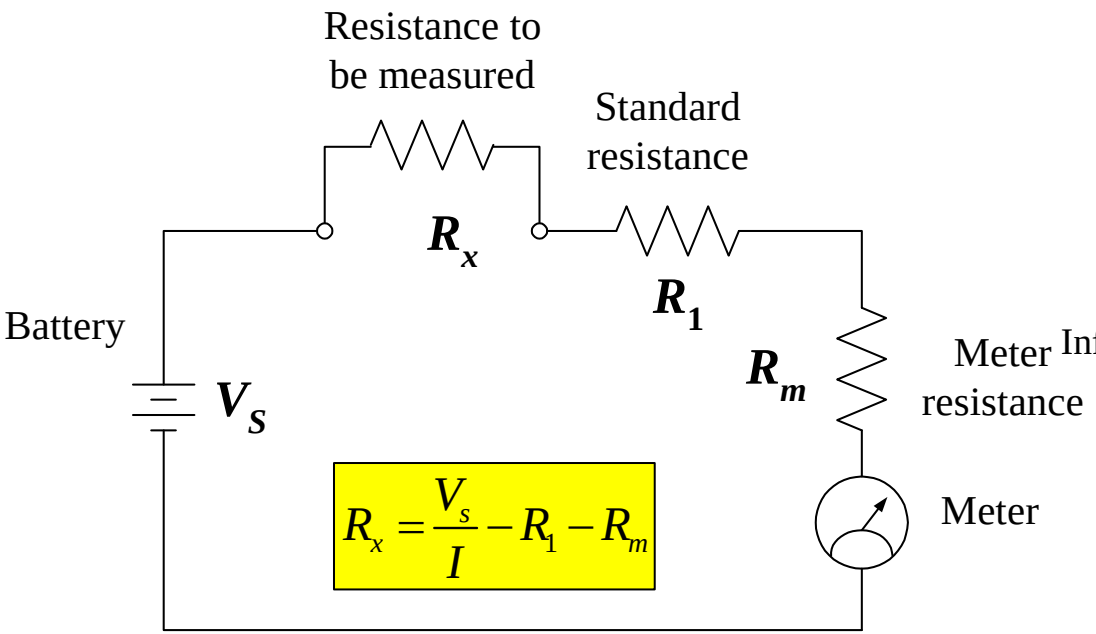

Basic series ohmmeter

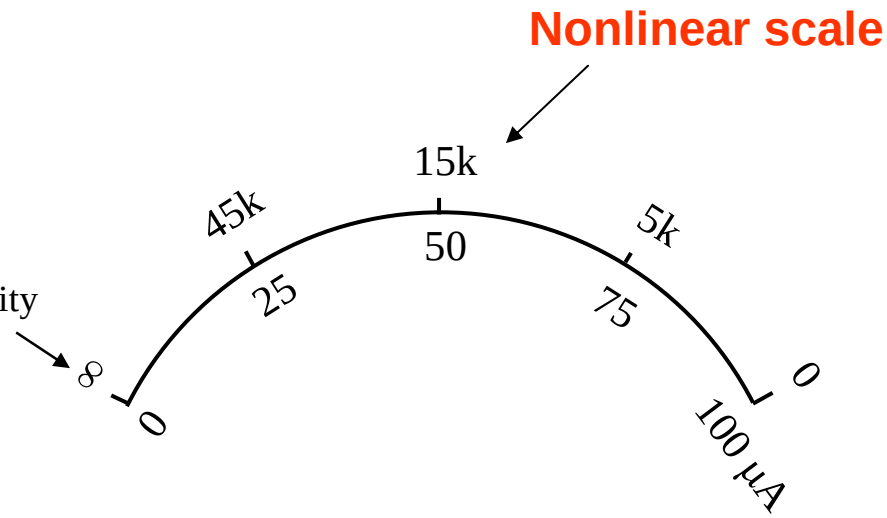

Ohmmeter scale

Basic series ohmmeter consisting of a PMMC and a series-connected standard resistor (R_1). When the ohmmeter terminals are shorted ($R_x = 0$) meter full scale defection occurs. At half scale defection $R_x = R_1 + R_m$, and at zero defection the terminals are open-circuited.

Loading Effect: Voltage Measurement

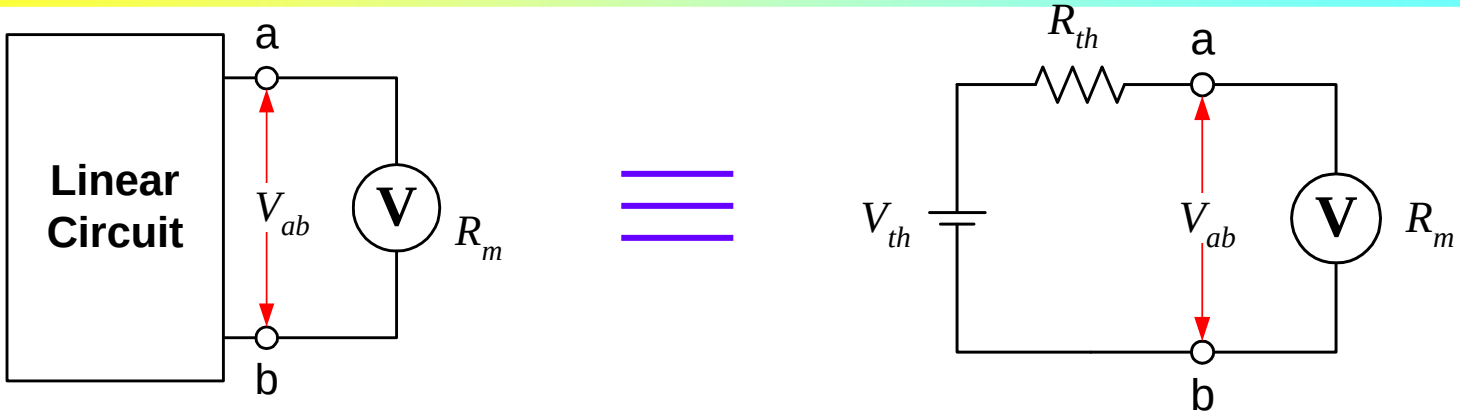

Undisturbed condition: $R_m = \infty$

$$V_{ab} = V_u = V_{th}$$

Measured condition: $R_m \neq \infty$

$$V_{ab} = V_m = \frac{R_m}{R_m + R_{th}} V_{th}$$

General equation:

$$\boxed{V_m = \frac{1}{1 + R_{th} / R_m} V_u}$$

Measurement error:

$$error = \frac{V_m - V_u}{V_u} \times 100$$

$$\boxed{= -\frac{R_{th}}{R_m + R_{th}} \times 100\% = -\frac{1}{1 + R_m / R_{th}} \times 100\%}$$

Therefore, in practice, to get the acceptable results, we must have $R_m \geq 10\ R_{th}$ (error ~ 9%)

Loading Effect

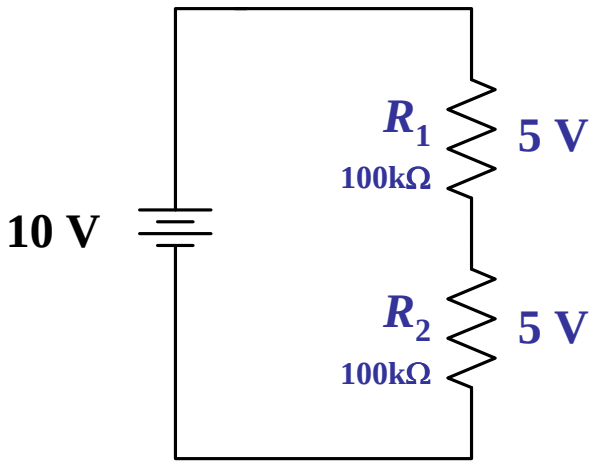

Circuit before measurement

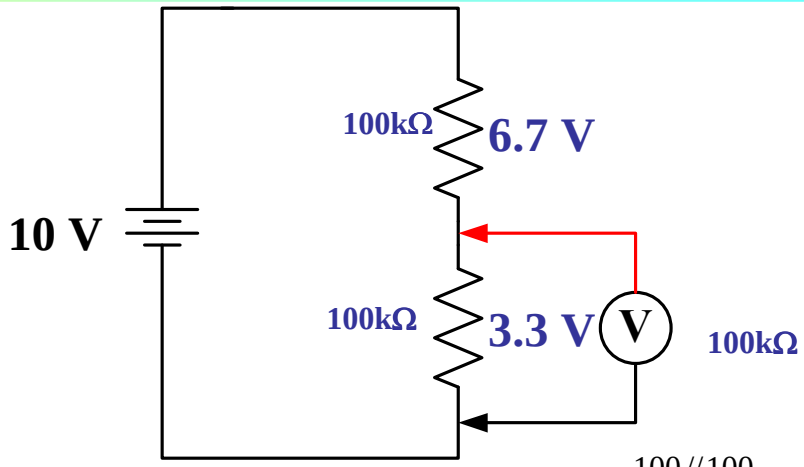

$$V_{meas} = \frac{100 // 100}{100 + 100 // 100} 10\text{ V} = 3.3\text{ V}$$

Circuit under measurement

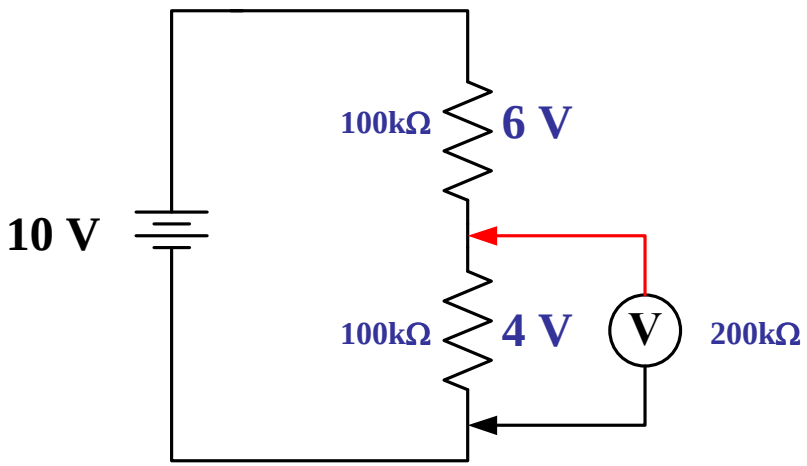

$$V_{meas} = \frac{200 // 100}{100 + 200 // 100} 10\text{ V} = 4.0\text{ V}$$

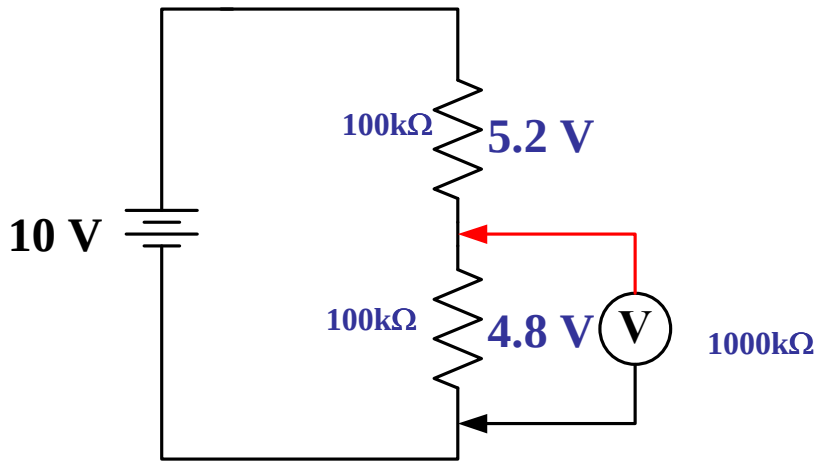

$$V_{meas} = \frac{1000 // 100}{100 + 1000 // 100} 10\text{ V} = 4.8\text{ V}$$

Loading Effect

Example Find the voltage reading and % error of each reading obtained with a voltmeter on (i) 5 V range, (ii) 10 V range and (iii) 30 V range, if the instrument has a 20 kΩ/V sensitivity, an accuracy 1% of full scale deflection and the meter is connected across R_b

SOLUTION The voltage drop across R_b without the voltmeter connection

$$V_b = \frac{R_b}{R_a + R_b} V = \frac{5\,\text{k}}{45\,\text{k} + 5\,\text{k}} \times 50 = 5\,\text{V}$$

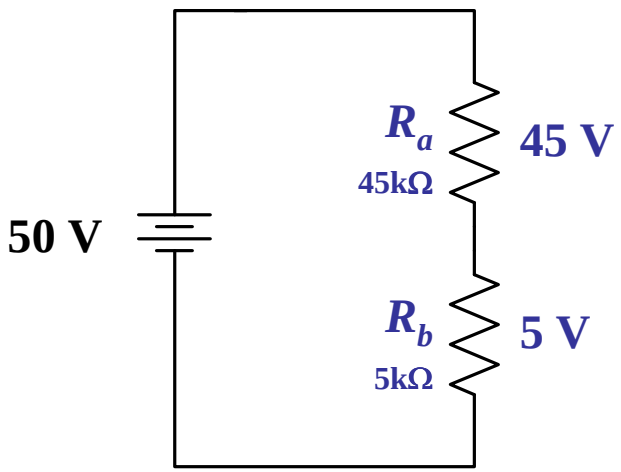

On the 5 V range

$$R_m = S \times \text{range} = 20k\Omega / V \times 5\text{V} = 100\,\text{k}\Omega$$

$$R_{eq} = \frac{R_m R_b}{R_m + R_b} = \frac{100\,\text{k} \times 5\,\text{k}}{100\,\text{k} + 5\,\text{k}} = 4.76\,\text{k}\Omega$$

The voltmeter reading is

$$V_b = \frac{R_{eq}}{R_a + R_{eq}} V = \frac{4.76\,\text{k}}{45\,\text{k} + 4.76\,\text{k}} 50 = 4.782\,\text{V}$$

Loading Effect

Error of the measurement is the combination of the loading effect and the meter error

The loading error = 4.782 - 5 = -0. 218 V

The meter error = ± 5 x $\frac{1}{100}$ = ± 0.05 V

∴% of error on the 5 V range:

$$= \frac{-0.218\,\text{V} \pm 0.05\,\text{V}}{5\,\text{V}} \times 100 = \pm 5.36\%$$

Range (V)	V_b. (V)	Loading error (V)	Meter error (V)	Total error (V)	% error
5	4.78	-0.22	± 0.05	± 0.27	± 5.36
10	4.88	-0.12	± 0.1	± 0.22	± 4.40
30	4.95	-0.05	± 0.3	± 0.35	± 6.10

Loading Effect: Current Measurement

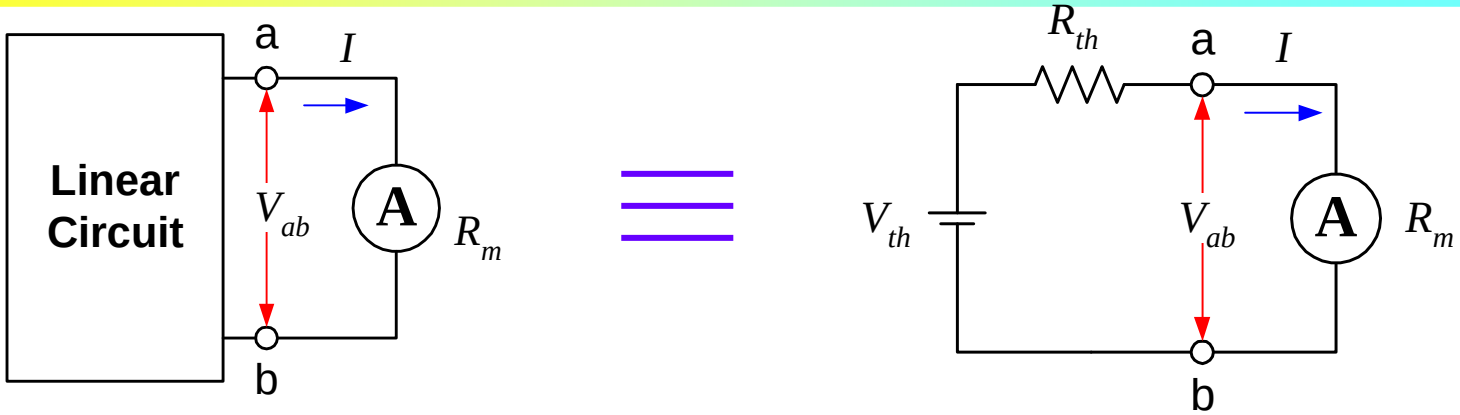

Undisturbed condition: $R_m = 0$

$$I = I_u = V_{th} / R_{th}$$

Measured condition: $R_m \neq 0$

$$I = I_m = V_{th} / (R_{th} + R_m)$$

General equation:

$$\boxed{I_m = I_u / (1 + R_m / R_{th})}$$

Measurement error:

$$error = \frac{I_m - I_u}{I_u} \times 100$$

$$\boxed{= -\frac{R_m}{R_m + R_{th}} \times 100\% = -\frac{1}{1 + R_{th} / R_m} \times 100\%}$$

Therefore, in practice, to get the acceptable results, we must have $R_m \leq R_{th}/10$ (error ~ 9%)

AC Voltmeter: PMMC Based

Waveform	Amplitude	Average	RMS
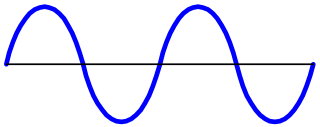	A	0	$\frac{A}{\sqrt{2}}$
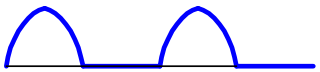	A	$\frac{A}{\pi}$	$\frac{A}{2}$
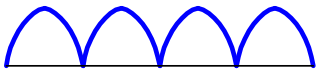	A	$\frac{2A}{\pi}$	$\frac{A}{\sqrt{2}}$
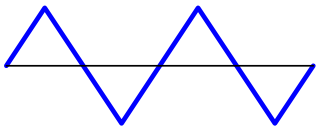	A	0	$\frac{A}{3}$
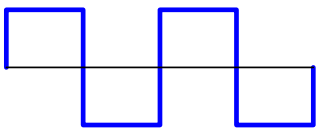	A	0	A
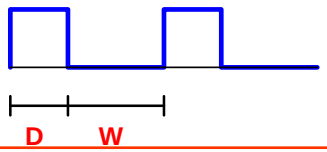	A	$\frac{D}{D+W}A$	$\sqrt{\frac{D}{D+W}}A$

AC Voltmeter: PMMC Based

- Basic PMMC instrument is polarized, therefore its terminals must be identified as + and -.
- PMMC instrument can not response quite well with the frequency 50 Hz or higher, So the pointer will settle at the average value of the current flowing through the moving coil: average-responding meter.

Full-wave Rectifier Voltmeter

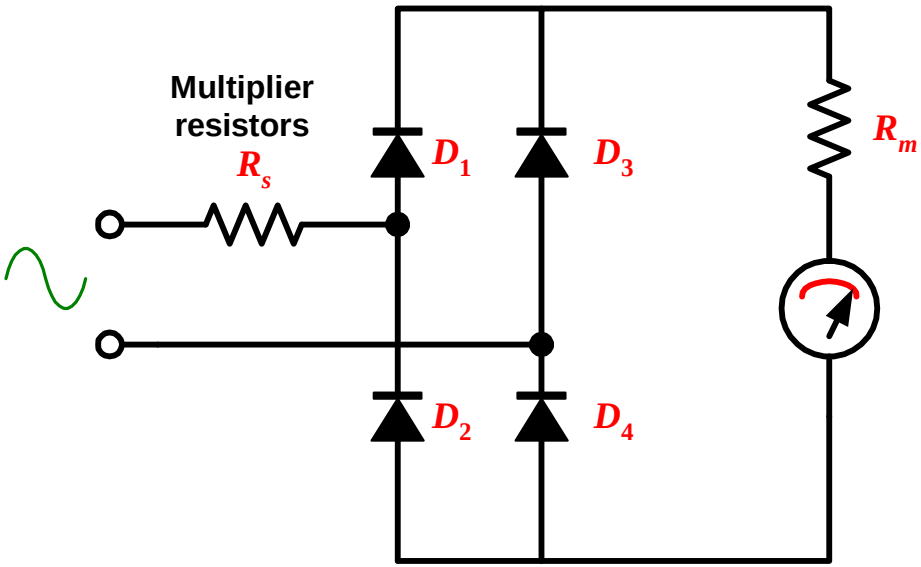

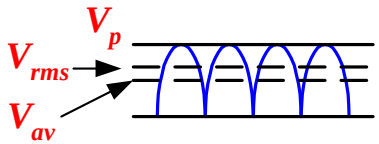

- Using 4 diodes
- On positive cycle, D1 and D4 are forward-biased, while D2 and D3 are reverse-biased
- On negative cycle, D2 and D3 are forward-biased, while D1 and D4 are reverse-biased
- The scale is calibrated for pure sine with the scale factor of 1.11 ($A/\sqrt{2}$ / $2A/\pi$)

- Actually voltage to be indicated in ac measurements is normally the rms quantity

AC Voltmeter: PMMC Based

Example: A PMMC instrument has FSD of 100 μA and a coil resistance of 1kΩ is to be employed as an ac voltmeter with FSD = 100 V (rms). Silicon diodes are used in the full-bridge rectifier circuit (a) calculate the multiplier resistance value required, (b) the position of the pointer when the rms input is 75 V and (c) the sensitivity of the voltmeter

Known: FSD of I_m R_m

Solution:

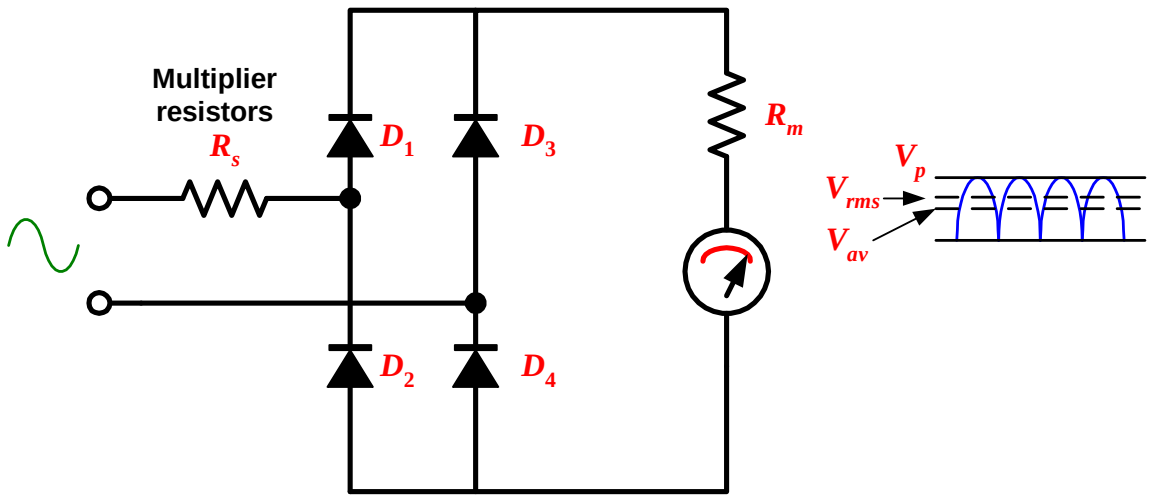

(a) R_s = 890.7 kΩ
(b) 0.75 of FSD
(c) 9 kΩ/V

AC Voltmeter: PMMC Based

Half-wave Rectifier Voltmeter

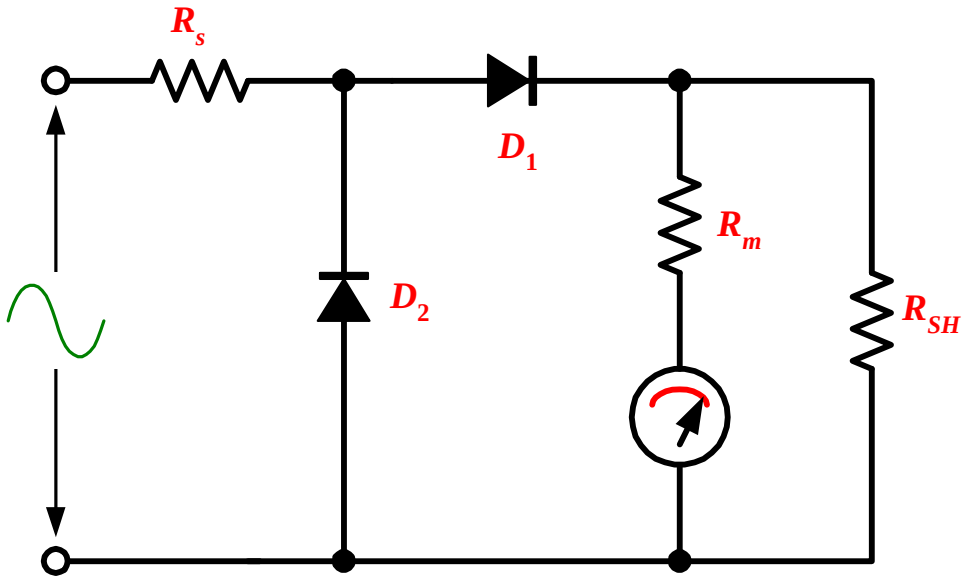

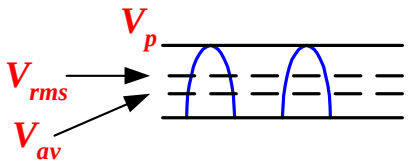

- On positive cycle, D1 is forward-biased, while D2 is reverse-biased
- On negative cycle, D2 is forward-biased, while D1 is reverse-biased
- The shunt resistor R_{SH} is connected to be able to measure the relative large current.
- The scale is calibrated for pure sine with the scale factor of 2.22 ($A/\sqrt{2}$ / A/π)

AC Voltmeter: PMMC Based

Example: A PMMC instrument has FSD of 50 μA and a coil resistance of 1700 Ω is used in the half-wave rectifier voltmeter. The silicon diode (D1) must have a minimum (peak) forward current of 100 μA. When the measured voltage is 20% of FSD. The voltmeter is to indicate 50 V_{rms} at full scale Calculate the values of R_S and R_{SH}.

Known: FSD of I_m R_m

Solution: R_S = 139.5 kΩ R_{SH} = 778 Ω

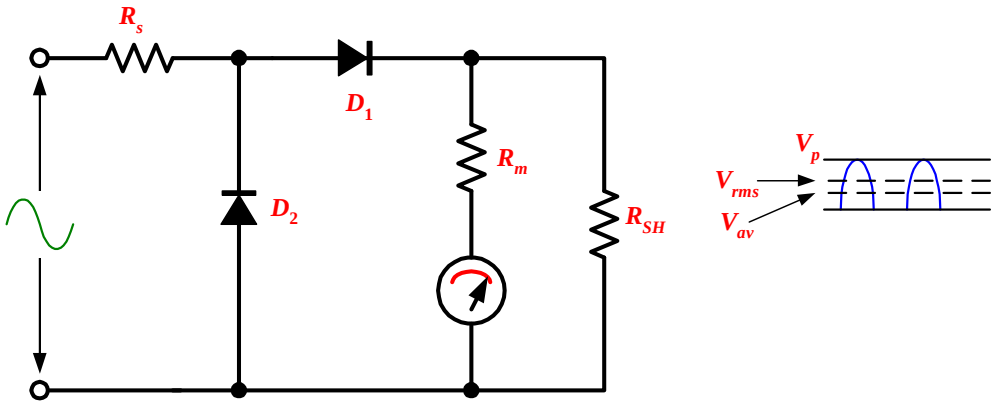

AC Voltmeter: PMMC Based

Example The symmetrical square-wave voltage is applied to an average-responding ac voltmeter with a scale calibrated in terms of the rms value of a sine wave. If the voltmeter is the full-wave rectified configuration. Calculate the error in the meter indication. Neglect all voltage drop in all diodes.

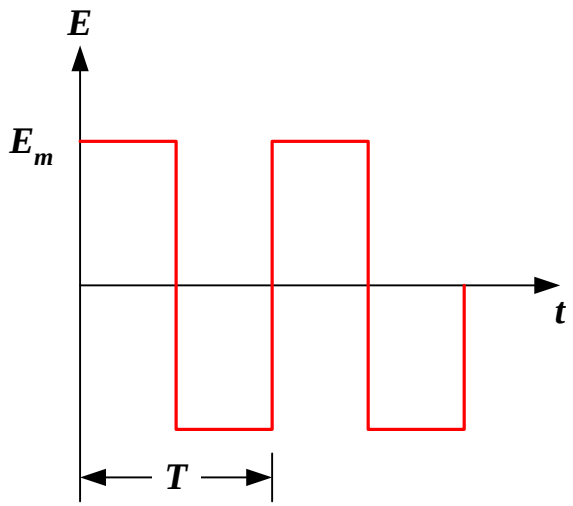

Solution 11%

Bridge Circuit

Bridge Circuit is a null method, operates on the principle of comparison. That is a known (standard) value is adjusted until it is equal to the unknown value.

Bridge Circuit

- **DC Bridge (Resistance)**
  - Wheatstone Bridge
  - Kelvin Bridge
  - Megaohm Bridge
- **AC Bridge**
  - **Inductance**
    - Maxwell Bridge
    - Hay Bridge
    - Owen Bridge
    - Etc.
  - **Capacitance**
    - Schering Bridge
  - **Frequency**
    - Wien Bridge

Wheatstone Bridge and Balance Condition

The standard resistor R_3 can be adjusted to null or balance the circuit.

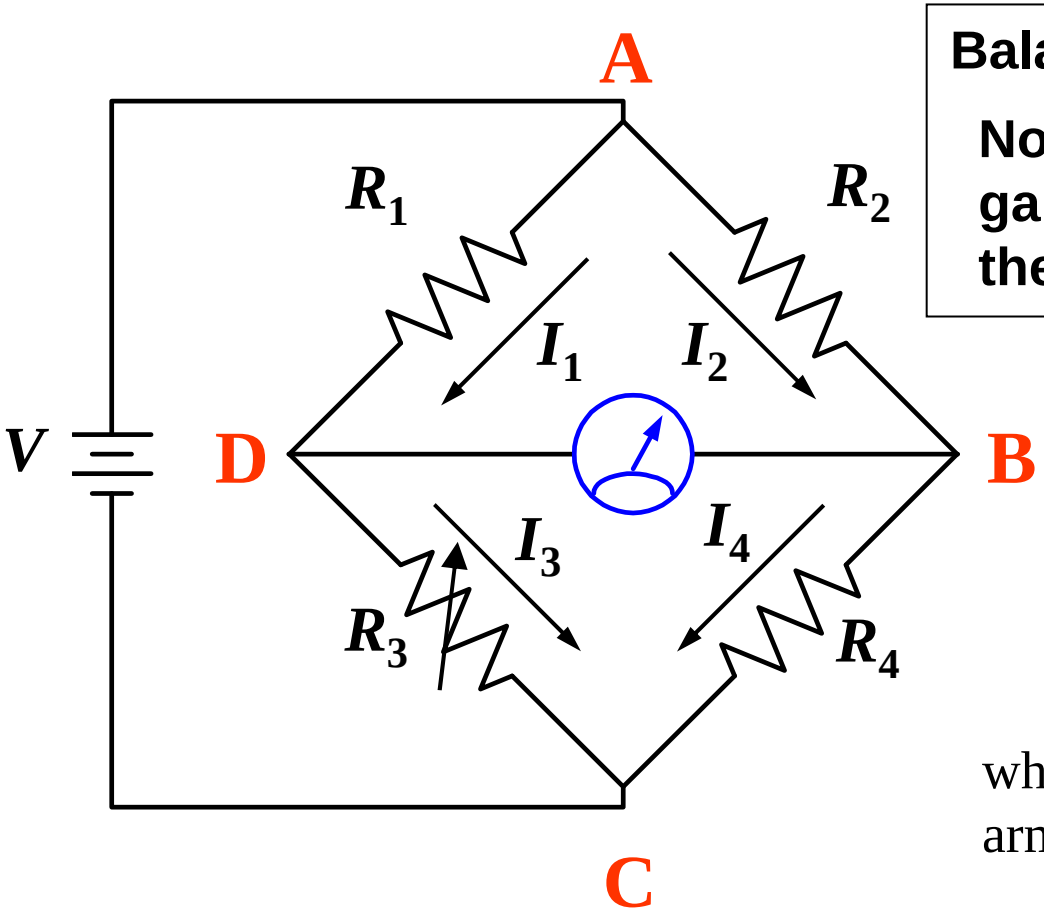

Balance condition:

No potential difference across the galvanometer (there is no current through the galvanometer)

Under this condition: $V_{AD} = V_{AB}$

$$I_1 R_1 = I_2 R_2$$

And also $V_{DC} = V_{BC}$

$$I_3 R_3 = I_4 R_4$$

where I_1, I_2, I_3, and I_4 are current in resistance arms respectively, since $I_1 = I_3$ and $I_2 = I_4$

$$\frac{R_1}{R_3} = \frac{R_2}{R_4} \quad \text{or} \quad \boxed{R_x = R_4 = R_3 \frac{R_2}{R_1}}$$

Example

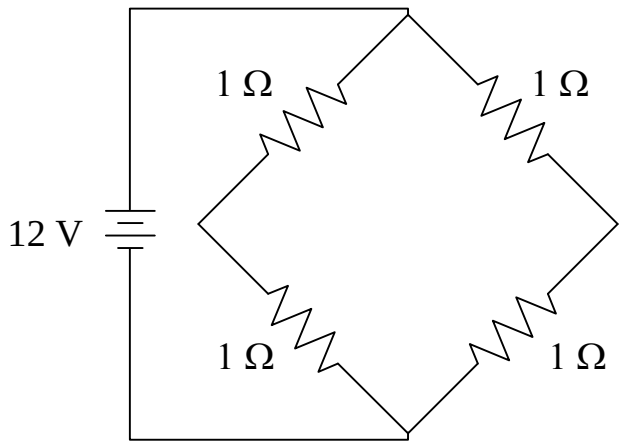

(a) Equal resistance

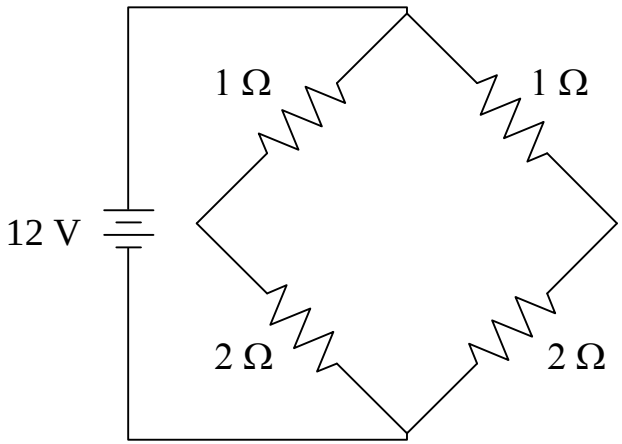

(b) Proportional resistance

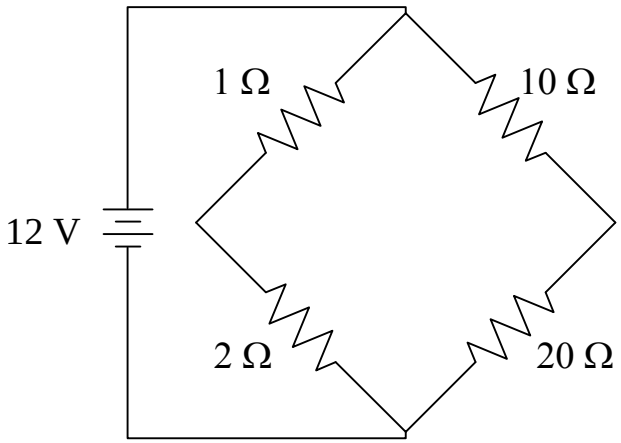

(c) Proportional resistance

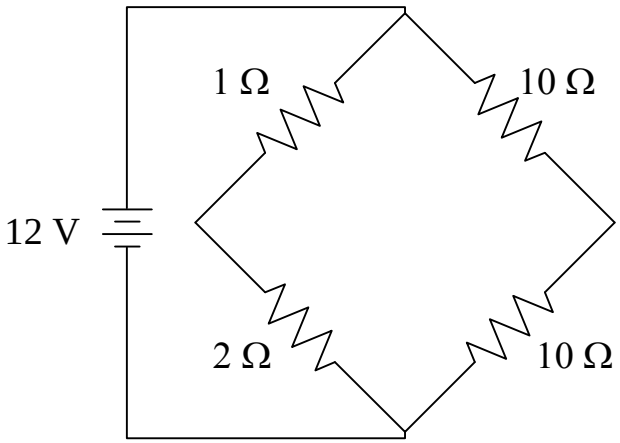

(d) 2-Volt unbalance

Sensitivity of Galvanometer

A galvanometer is use to detect an unbalance condition in Wheatstone bridge. Its sensitivity is governed by: *Current sensitivity (currents per unit defection) and internal resistance.*

consider a bridge circuit under a small unbalance condition, and apply circuit analysis to solve the current through galvanometer

Thévenin Equivalent Circuit

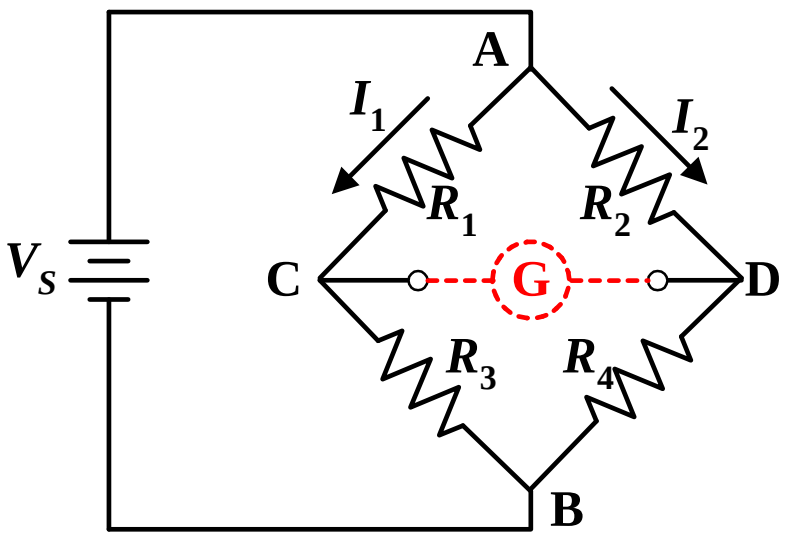

Thévenin Voltage (V_{TH})

$$V_{CD} = V_{AC} - V_{AD} = I_1 R_1 - I_2 R_2$$

where $I_1 = \dfrac{V}{R_1 + R_3}$ and $I_2 = \dfrac{V}{R_2 + R_4}$

Therefore $$\boxed{V_{TH} = V_{CD} = V\left(\frac{R_1}{R_1 + R_3} - \frac{R_2}{R_2 + R_4}\right)}$$

Sensitivity of Galvanometer (continued)

Thévenin Resistance (R_{TH})

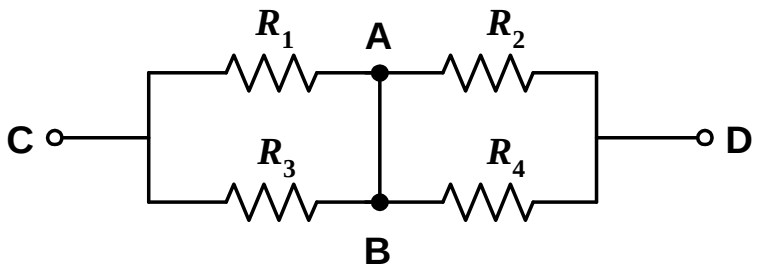

$$R_{TH} = R_1 // R_3 + R_2 // R_4$$

Completed Circuit

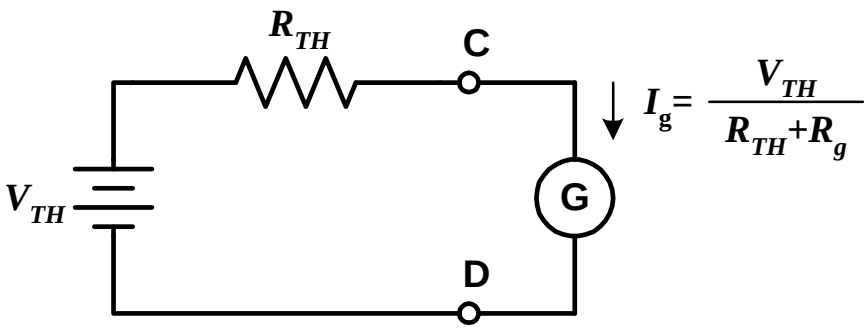

$$I_g = \frac{V_{TH}}{R_{TH} + R_g}$$

where I_g = the galvanometer current
R_g = the galvanometer resistance

Example 1 Figure below show the schematic diagram of a Wheatstone bridge with values of the bridge elements. The battery voltage is 5 V and its internal resistance negligible. The galvanometer has a current sensitivity of 10 mm/μA and an internal resistance of 100 Ω. Calculate the deflection of the galvanometer caused by the 5-Ω unbalance in arm *BC*

SOLUTION The bridge circuit is in the small unbalance condition since the value of resistance in arm BC is 2,005 Ω.

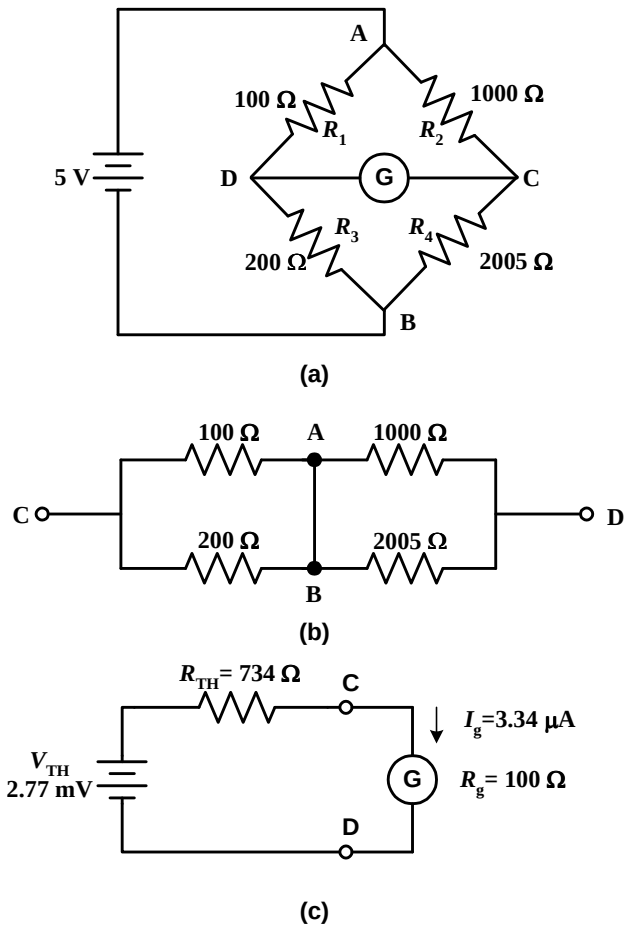

Thévenin Voltage (V_{TH})

$$V_{TH} = V_{AD} - V_{AC} = 5\text{ V} \times \left(\frac{100}{100+200} - \frac{1000}{1000+2005} \right)$$

$$\approx 2.77\text{ mV}$$

Thévenin Resistance (R_{TH})

$$R_{TH} = 100 // 200 + 1000 // 2005 = 734\ \Omega$$

The galvanometer current

$$I_g = \frac{V_{TH}}{R_{TH} + R_g} = \frac{2.77\text{ mV}}{734\ \Omega + 100\ \Omega} = 3.32\ \mu\text{A}$$

Galvanometer deflection

$$d = 3.32\ \mu\text{A} \times \frac{10\text{ mm}}{\mu\text{A}} = 33.2\text{ mm}$$

Example 2 The galvanometer in the previous example is replaced by one with an internal resistance of 500 Ω and a current sensitivity of 1mm/μA. Assuming that a deflection of 1 mm can be observed on the galvanometer scale, determine if this new galvanometer is capable of detecting the 5-Ω unbalance in arm *BC*

Example 3 If all resistances in the Example 1 increase by 10 times, and we use the galvanometer in the Example 2. Assuming that a deflection of 1 mm can be observed on the galvanometer scale, determine if this new setting can be detected (the 50-Ω unbalance in arm *BC*)

Deflection Method

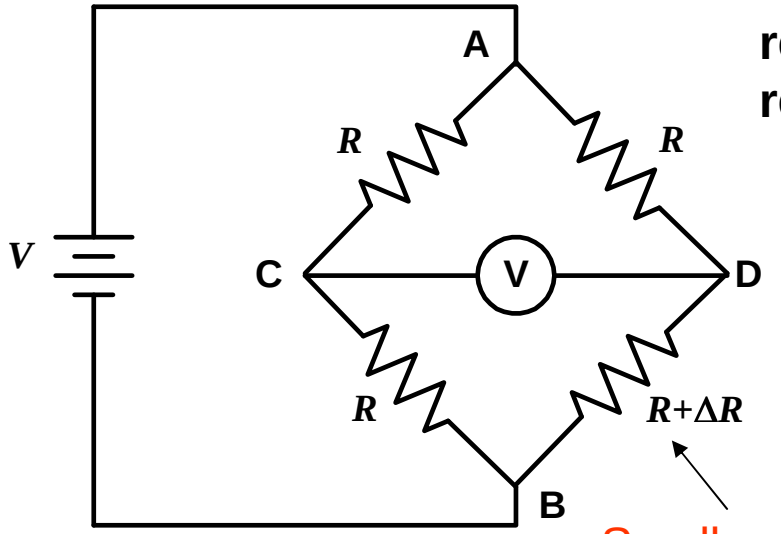

Small unbalance occur by the external environment

Consider a bridge circuit which have identical resistors, R in three arms, and the last arm has the resistance of $R + \Delta R$. if $\Delta R/R$ <<1

Please correct

Thévenin Voltage (V_{TH})

$$V_{TH} = V_{CD} = V\frac{\Delta R/R}{4 + 2\Delta R/R}$$

Thévenin Resistance (R_{TH})

$$R_{TH} \approx R$$

In an unbalanced condition, the magnitude of the current or voltage drop for the meter or galvanometer portion of a bridge circuit is a direct indication of the change in resistance in one arm.

This kind of bridge circuit can be found in sensor applications, where the resistance in one arm is sensitive to a physical quantity such as pressure, temperature, strain etc.

Example Circuit in Figure (a) below consists of a resistor R_v which is sensitive to the temperature change. The plot of R VS $Temp$. is also shown in Figure (b). Find (a) the temperature at which the bridge is balance and (b) The output signal at Temperature of 60°C.

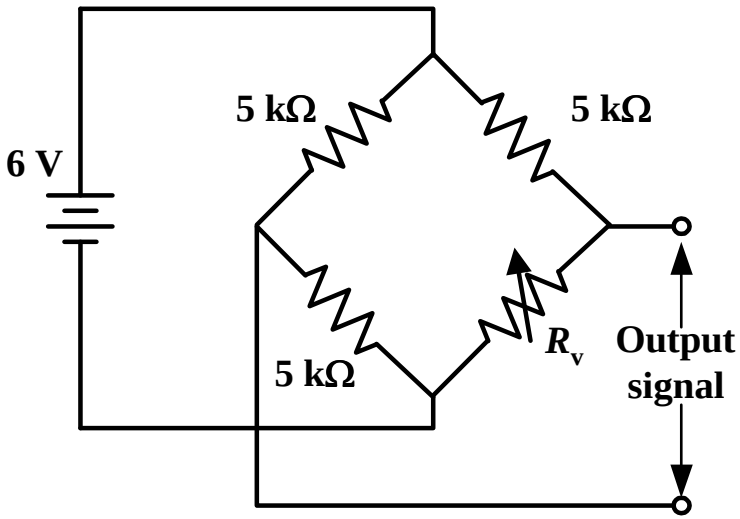

(a)

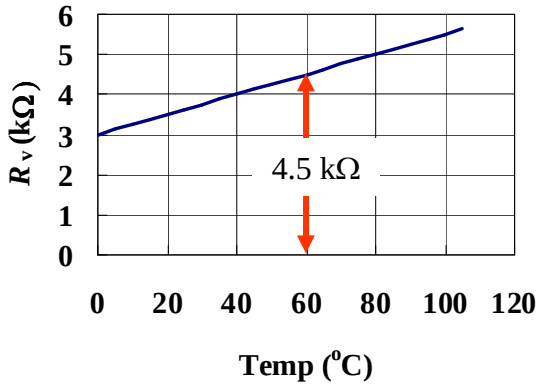

(b)

AC Bridge: Balance Condition

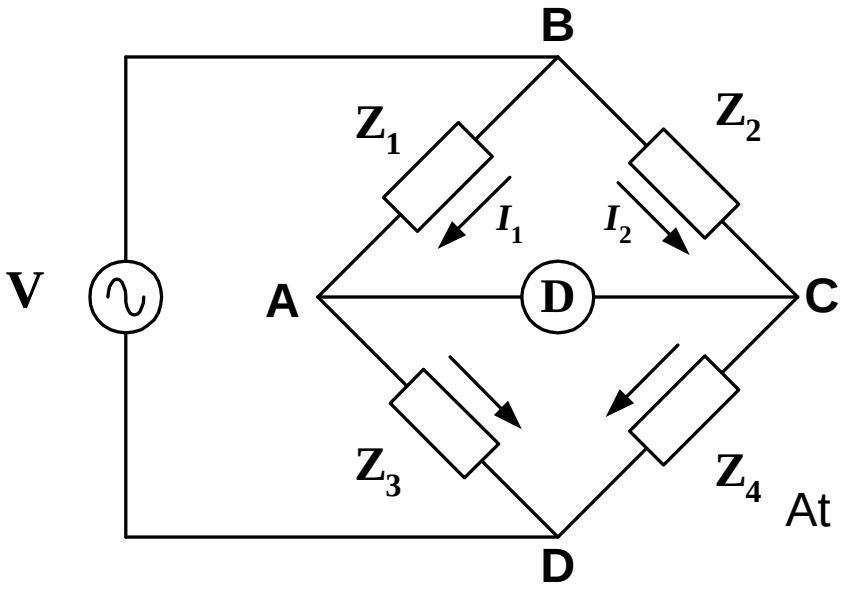

- all four arms are considered as impedance (frequency dependent components)
- The detector is an ac responding device: headphone, ac meter
- Source: an ac voltage at desired frequency

Z_1, Z_2, Z_3 and Z_4 are the impedance of bridge arms

At balance point: $E_{BA} = E_{BC}$ or $I_1 Z_1 = I_2 Z_2$

$$I_1 = \frac{V}{Z_1 + Z_3} \text{ and } I_2 = \frac{V}{Z_2 + Z_4}$$

General Form of the ac Bridge

Complex Form: $\boxed{Z_1 Z_4 = Z_2 Z_3}$

Polar Form:

$$\boxed{Z_1 Z_4 (\angle\theta_1 + \angle\theta_4) = Z_2 Z_3 (\angle\theta_2 + \angle\theta_3)}$$

Magnitude balance: $\boxed{Z_1 Z_4 = Z_2 Z_3}$

Phase balance: $\boxed{\angle\theta_1 + \angle\theta_4 = \angle\theta_2 + \angle\theta_3}$

Example The impedance of the basic ac bridge are given as follows:

$\mathbf{Z}_1 = 100\ \Omega\ \angle 80^{\circ}$ (inductive impedance)

$\mathbf{Z}_2 = 250\ \Omega$ (pure resistance)

$\mathbf{Z}_3 = 400\ \angle 30^{\circ}\Omega$ (inductive impedance)

$\mathbf{Z}_4 =$ unknown

Determine the constants of the unknown arm.

Example an ac bridge is in balance with the following constants: arm AB, R = 200 Ω in series with L = 15.9 mH R; arm BC, R = 300 Ω in series with C = 0.265 μF; arm CD, unknown; arm DA, = 450 Ω. The oscillator frequency is 1 kHz. Find the constants of arm CD.

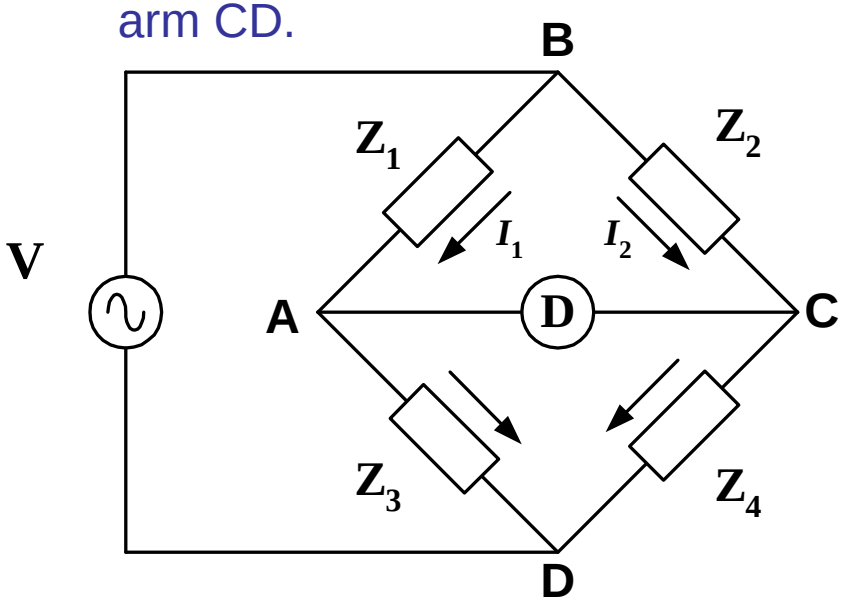

SOLUTION

$$\mathbf{Z}_1 = R + j\omega L = 200 + j100\ \Omega$$

$$\mathbf{Z}_2 = R + 1/\ j\omega C = 300 - j600\ \Omega$$

$$\mathbf{Z}_3 = R = 450\ \Omega$$

$$\mathbf{Z}_4 = \text{unknown}$$

The general equation for bridge balance states that $\mathbf{Z}_1\mathbf{Z}_4 = \mathbf{Z}_2\mathbf{Z}_3$

Operational Amplifier: Op Amp

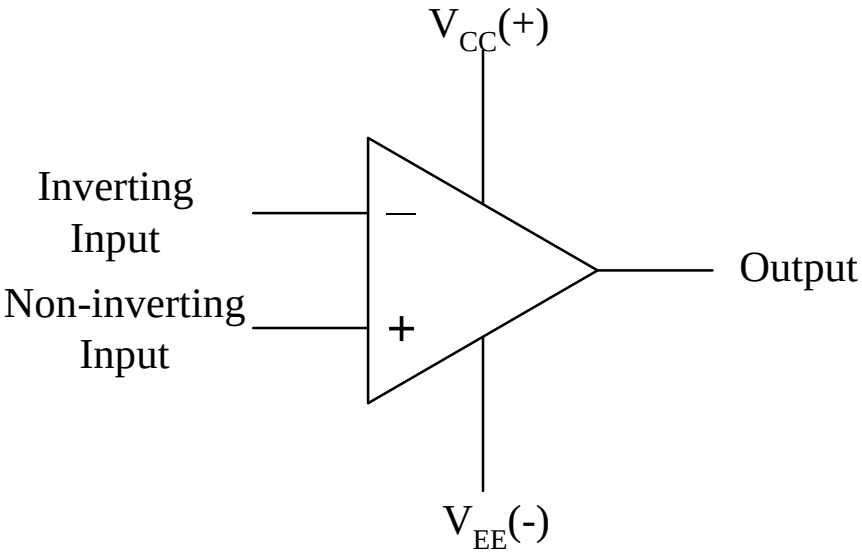

(a) Electrical Symbol for the op amp

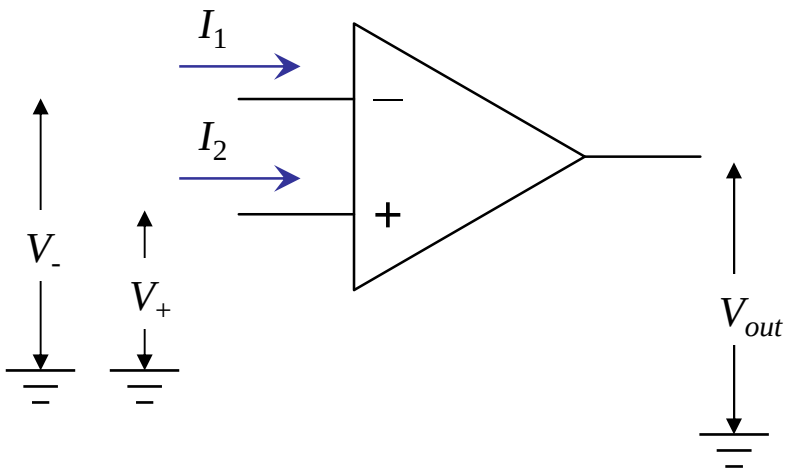

(b) Minimum connections to an op amp

Ideal Op Amp Rules:

1. No current flows in to either input terminal
2. There is no voltage difference between the two input terminals

Rule 1: $I_1 = I_2 = 0$; R+/- = ∞

Rule 2: $V+ = V-$; **Virtually shorted**

Inverting Amplifier

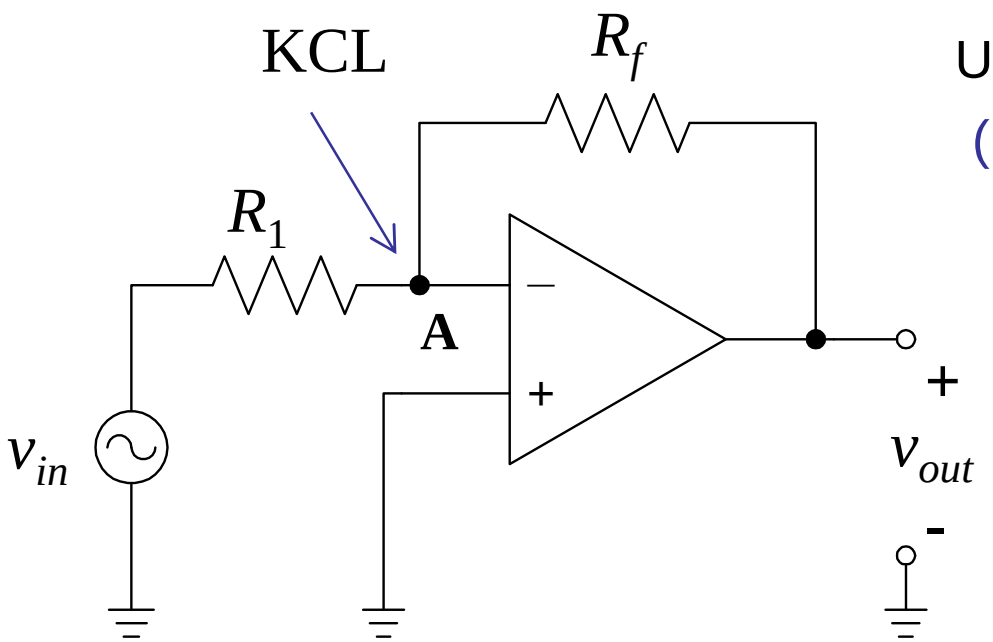

Use KCL at point A and apply Rule 1:

(no current flows into the inverting input)

$$\frac{v_A - v_{in}}{R_1} + \frac{v_A - v_{out}}{R_f} = 0$$

Rearrange

$$v_A\left(\frac{1}{R_1} + \frac{1}{R_f}\right) - \left(\frac{v_{in}}{R_1} + \frac{v_{out}}{R_f}\right) = 0$$

Apply Rule 2: (no voltage difference between inverting and non-inverting inputs)

Since V+ at zero volts, therefore V- is also at zero volts too.

$$\boxed{v_A = 0}$$

$$\frac{v_{in}}{R_1} + \frac{v_{out}}{R_f} = 0 \quad \Rightarrow \quad \boxed{\frac{v_{out}}{v_{in}} = -\frac{R_f}{R_1}}$$

Inverting Amplifier: another approach

No current flows into op amp

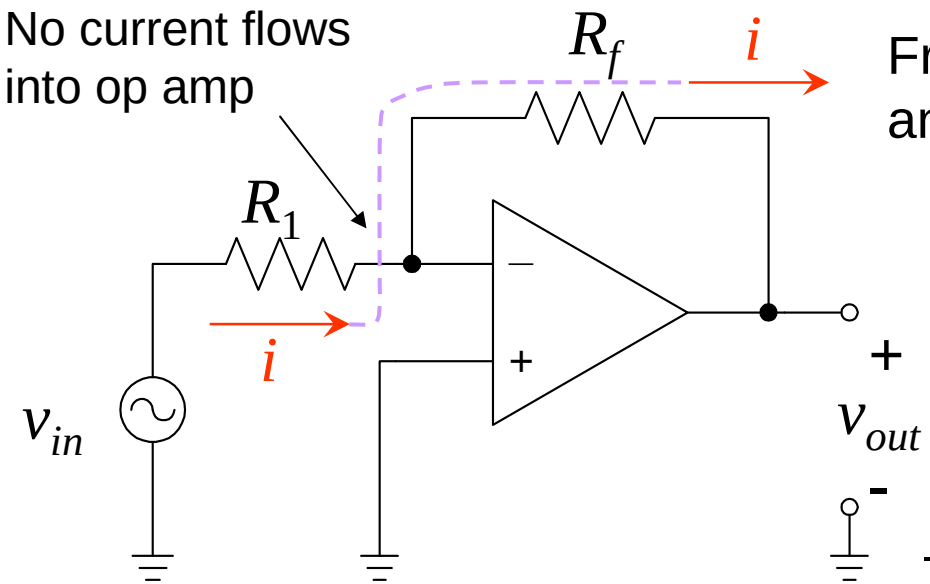

From Rule 2: we know that $V- = V+ = 0$, and therefore

$$-v_{in} + iR_1 - \cancel{V^-}^{\,0} = 0 \quad \Rightarrow \quad i = \frac{v_{in}}{R_1}$$

Since there is no current into op amp (Rule 1)

$$-\cancel{V^-}^{\,0} + iR_f + v_{out} = 0 \quad \Rightarrow \quad v_{out} = -iR_f$$

Combine the results, we get

$$\frac{v_{out}}{v_{in}} = -\frac{R_f}{R_1}$$

Given $v_{in} = 5\sin 3t$, R_1=4.7 kΩ and R_f =47 kΩ

$$v_{out} = -10v_{in} = -50 \sin 3t \quad \text{mV}$$

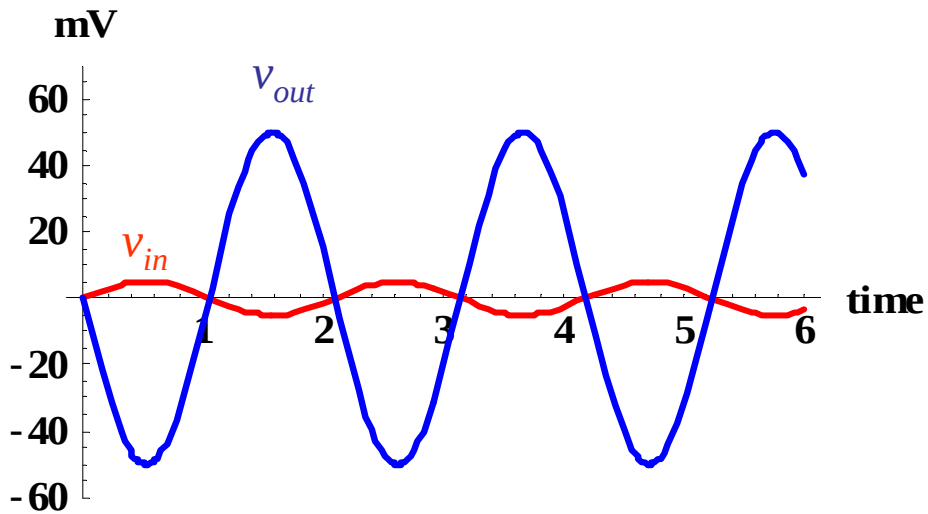

Non-inverting Amplifier

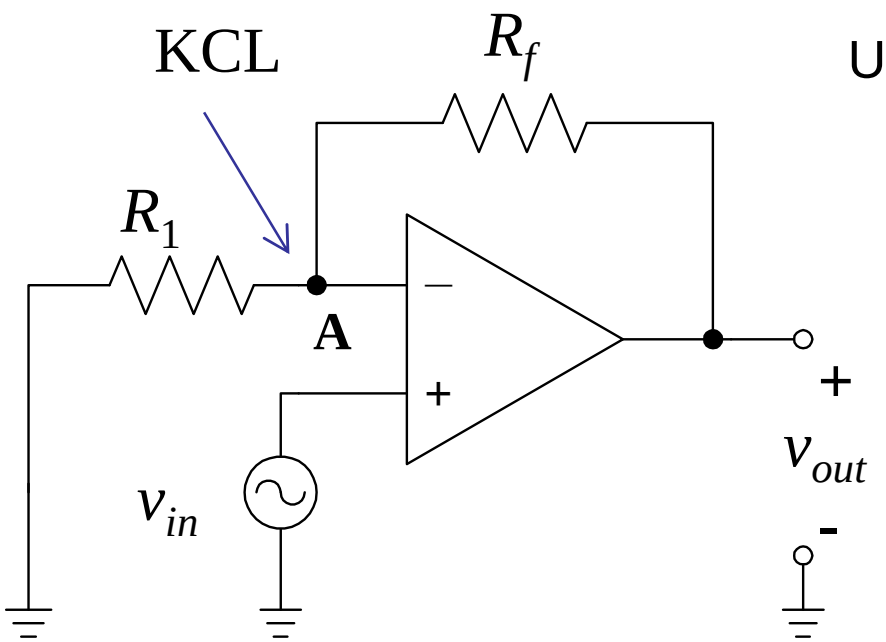

Use KCL at point A and apply Rule 1:

$$\frac{v_A}{R_1} + \frac{v_A - v_{out}}{R_f} = 0$$

Apply Rule 2: $v_{in} = v_A$

$$\boxed{\frac{v_{out}}{v_{in}} = 1 + \frac{R_f}{R_1}}$$

Given $v_{in} = 5\sin 3t$, R_1=4.7 kΩ and R_f =47 kΩ

$$v_{out} = 11 v_{in} = 55 \sin 3t \qquad \text{mV}$$

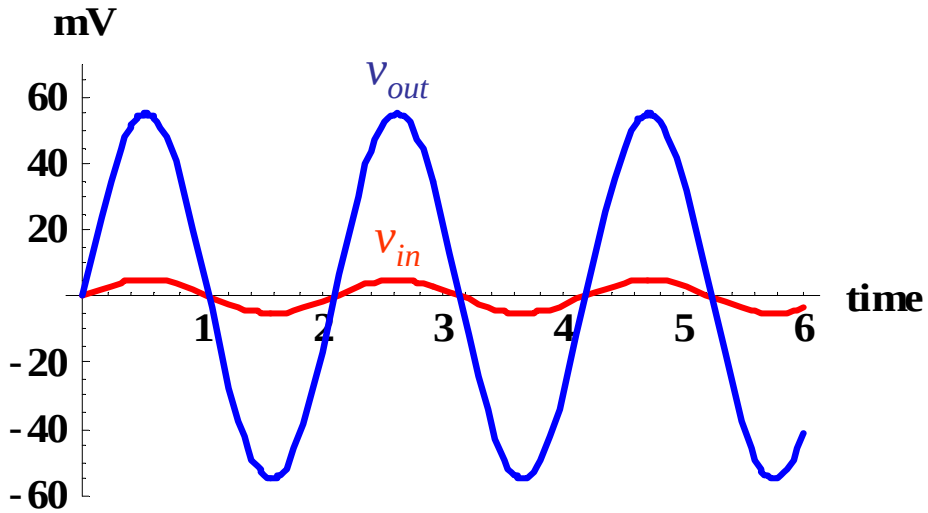

Summing Amplifier: Mathematic Operation

$$i = i_1 + i_2 + i_3$$

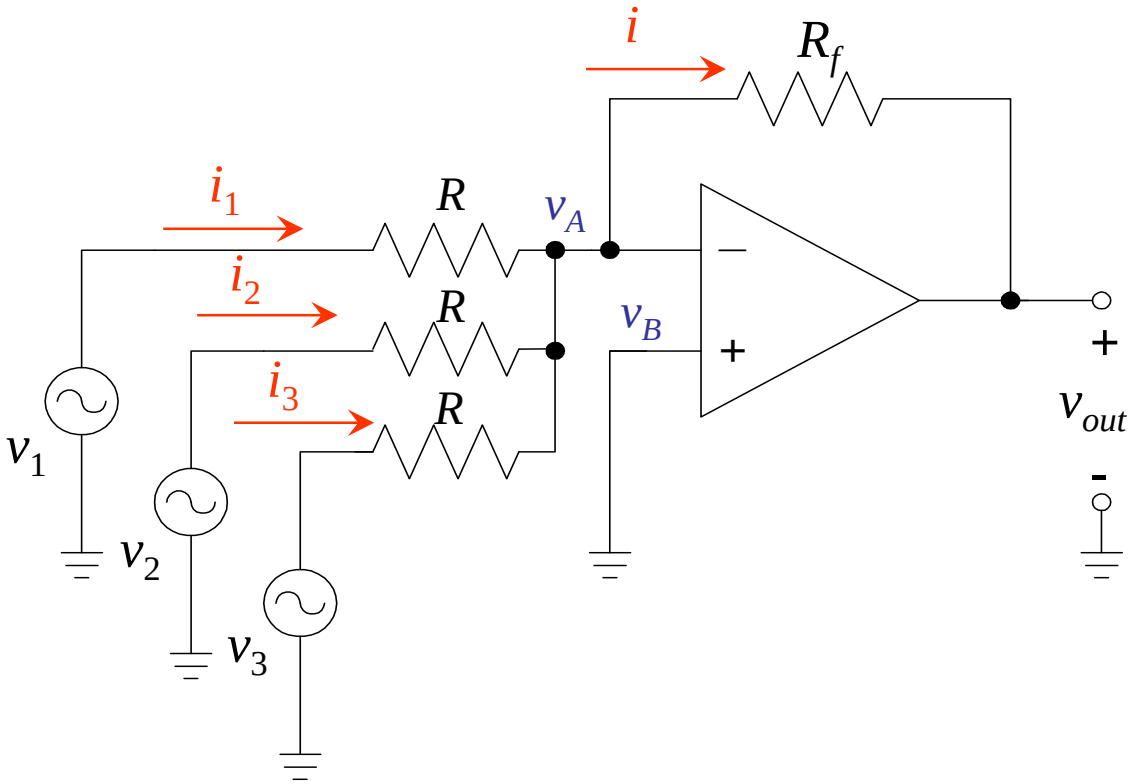

Use KCL and apply Rule 1:

$$\frac{v_A - v_1}{R} + \frac{v_A - v_2}{R} + \frac{v_A - v_3}{R} + \frac{v_A - v_{out}}{R_f} = 0$$

Since $v_A = 0$ (Rule 2)

$$\boxed{v_{out} = -\frac{R_f}{R}\underbrace{(v_1 + v_2 + v_3)}_{\text{Sum of } v_1,\ v_2 \text{ and } v_3}}$$

Difference Amplifier: Mathematic Operation

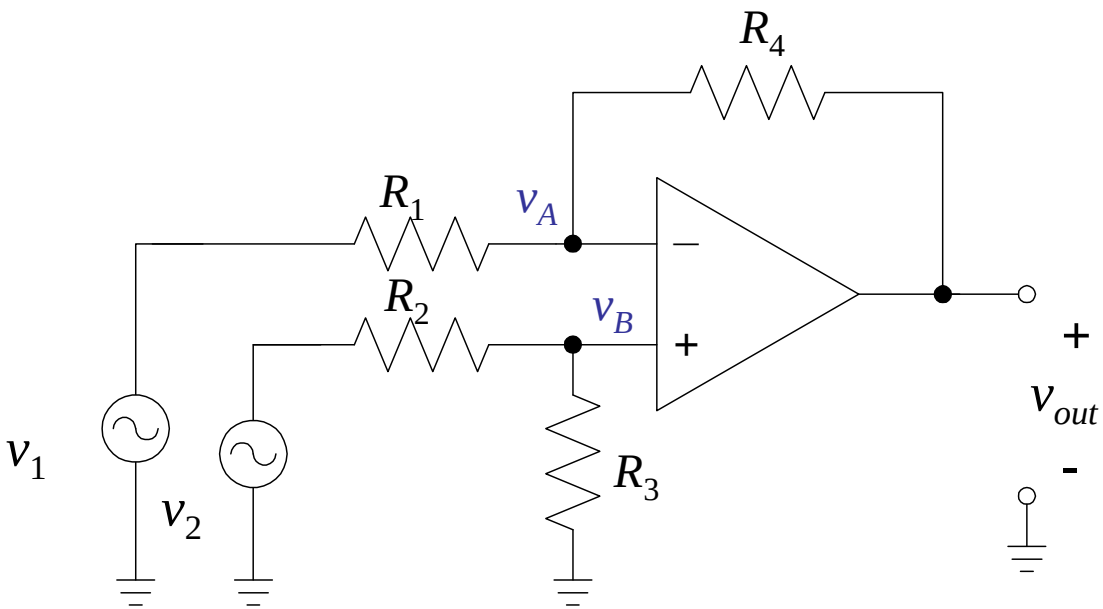

Use KCL and apply Rule 1:

$$\frac{v_A - v_1}{R_1} + \frac{v_A - v_{out}}{R_4} = 0 \qquad \text{(1)}$$

Since $v_A = v_B$ (Rule 2) and

$$v_A = v_B = \left(\frac{R_3}{R_2 + R_3}\right) v_2 \qquad \text{(2)}$$

Substitute eq. (2) into eq. (1), we get

$$\frac{v_{out}}{R_4} = \left(\frac{R_1 + R_4}{R_1 R_4}\right)\left(\frac{R_3}{R_2 + R_3}\right) v_2 - \frac{v_1}{R_1}$$

If $R_1 = R_2 = R$ and $R_3 = R_4 = R_f$

$$\boxed{v_{out} = \frac{R_f}{R}\underbrace{(v_2 - v_1)}_{\text{Difference of } v_1 \text{ and } v_2}}$$

Differentiator and Integrator: Mathematic Operation

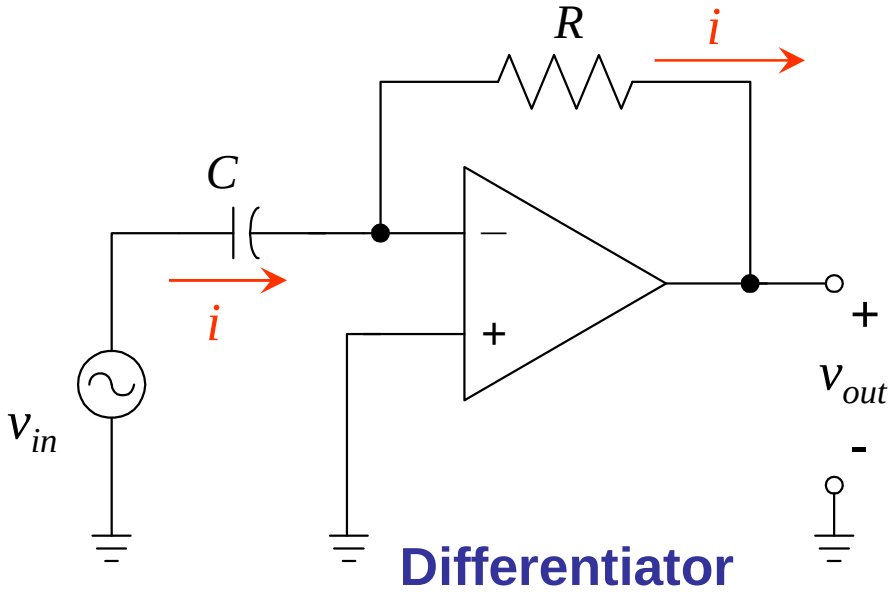

Differentiator

$$v_{out} = -iR$$

But $i = C\dfrac{dv_C}{dt}$ and $v_{in} = v_C$

$$\boxed{v_{out} = -RC\frac{dv_{in}}{dt}}$$

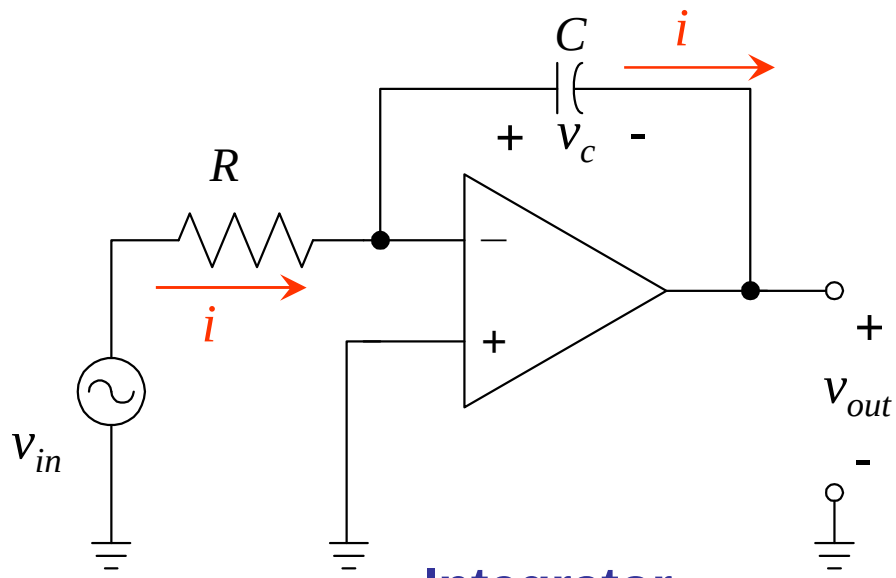

Integrator

$$v_{out} = -v_C$$

But $v_C(t) = \dfrac{1}{C}\displaystyle\int_0^t i\,dt + v_C(0)$ and $v_{in} = iR$

$$\boxed{v_{out} = -\frac{1}{RC}\int_0^t v_{in}\,dt + v_C(0)}$$