Position Transducer

- Potentiometer
  - Linear and angular displacement
  - Inexpensive, easy to use
- Linear variable differential Transformer (LVDT)
  - Linear and angular position
  - Capable to measurement small displacement
- Encoder
  - Angular position
  - Rug and easily to interface with computer (digital output in nature)
- etc.

Potentiometer

Potentiometers – a resistive device with a linear or rotary sliding contacts.

Linear displacement: $$R(x) = \frac{R_p}{L} x$$

Angular displacement: $$R(\theta) = \frac{R_p}{\Theta} \theta$$

Where L is the total length, Θ the total angular displacement, and R_p is the total resistance

$$\text{Resolution} = \frac{\text{full scale displacement}}{\text{number of turns}}$$

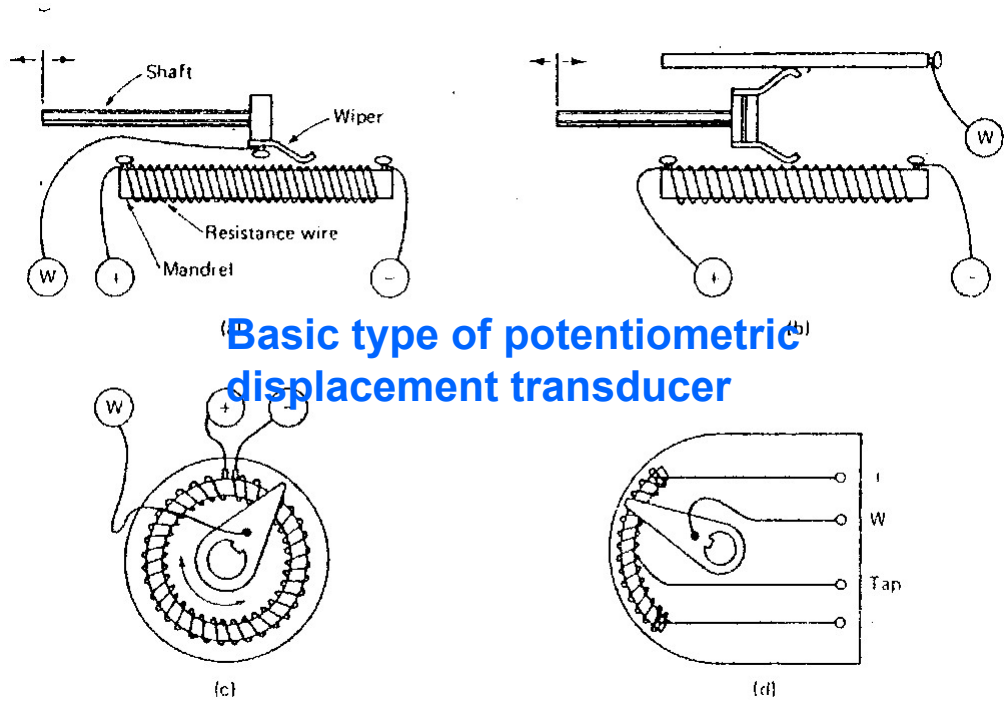

Basic type of potentiometric displacement transducer

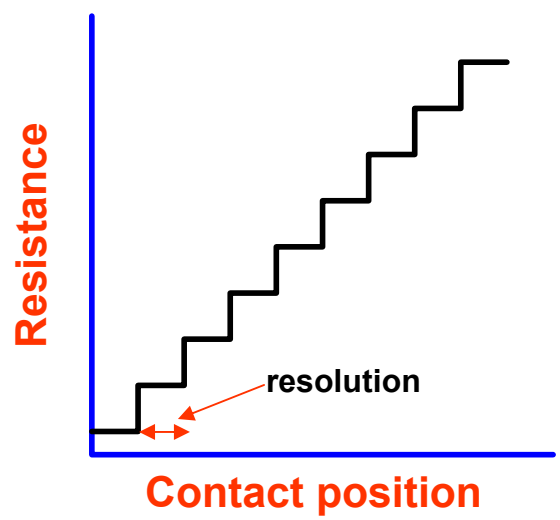

Potentiometer

Ex. It is necessary to measure the position of a panel. It moves 0.8 m. Its position must be know within 0.1 cm. Part of the mechanism which moves the panel is shaft that rotate 250° when Panel is moved from one extreme to the other. A control potential has been found which is rated at 300° full scale movement. It has been 1000 turns of wire. Can this be used?

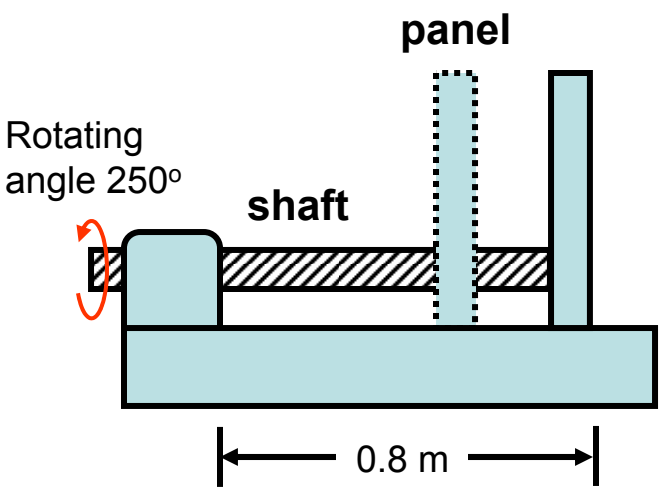

Required resolution better than 0.1 cm

Solution The shaft provides a conversion

$$\frac{250^\circ}{0.8\text{ m}} = 312.5^\circ/\text{m or } 3.125^\circ/\text{cm}$$

A resolution of 0.1 cm at the panel translates into

$$0.1\text{ cm} \times 3.125^\circ/\text{cm} = 0.3125^\circ$$

Required resolution for the potentiometer. The given potentiometer actually has a resolution of

$$\frac{300^\circ}{1000\text{ turns}} = 0.300^\circ$$

The potentiometer can detect a change of 0.3°, which is finer than the required 0.3125°. So the available potentiometer will work.

Potentiometer

Important Characteristics:

resolution, linearity, accuracy, output span,
power rating and derating factor
noise (electrical contact)
starting and remain torque
moment of inertia

- **Self-heating**

Self-heating occurs because of the power dissipation in sensor, $P_D = I^2 R_T$

The increase in temperature from self-heating ΔT due to $P_D = I^2 R_T$ is

$$\boxed{P_D = \delta \Delta T} \quad \text{or} \quad \boxed{\Delta T = P_D \theta}$$

Where δ is heat dissipation factor (mW/K)
θ is thermal resistance (K/mW)

To minimize self-heating effect, the power dissipation must be limited.

Potentiometer

Ex. A control potentiometer is rated as

150 Ω

1 W (derate at 10 mW/°C above 65°C)

30°C/W thermal resistance

Can it be used with 10 V supply at 80°C ambient temperature?

Solution The power dissipated by the potentiometer is

$$P = \frac{V^2}{R} = \frac{(10\text{ V})^2}{150\,\Omega} = 667\text{ mW}$$

The actual temperature of the potentiometer

$$T_{pot} = T_{ambient} + P\theta$$

$$= 80^\circ\text{C} + (667\text{ mW})(30^\circ\text{C/W}) = 100^\circ\text{C}$$

The allowable power dissipation must be derated (decreased) by 10 mW for each degree above 65°C

$$P_{allowed} = P_{rated} - (Tpot - 65^\circ\text{C})(10\text{mW}/^\circ\text{C})$$

$$= 1000\text{ mW} - (100^\circ\text{C} - 65^\circ\text{C})(10\text{mW}/^\circ\text{C})$$

$$= 650\text{ mW}$$

Thus, the potentiometer can be used with the situation stated.

Potentiometer: Linearity

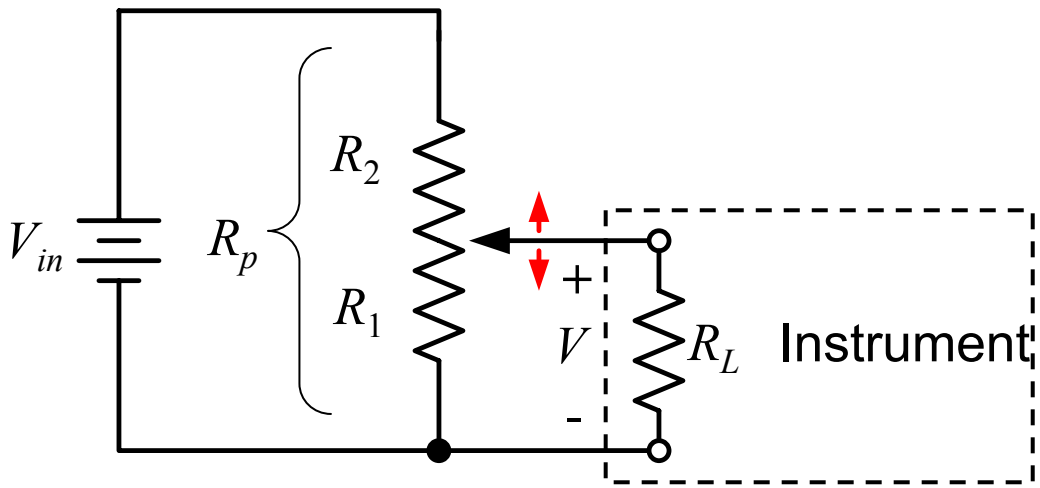

$$V_{ideal} = \frac{R_1}{R_1 + R_2} V_{in} = \frac{R_1}{R_p} V_{in}$$

$$V_{actual} = \frac{R_1 // R_L}{R_1 // R_L + R_2} V_{in}$$

$$= \frac{R_1 R_L}{R_1 R_L + R_1 R_2 + R_2 R_L} V_{in}$$

Linearity: terminal base line

$$\%Linearity = \frac{V_{\text{actual}} - V_{\text{ideal}}}{\text{full scale}} \times 100\%$$

Here, full scale output = V_{in}

$$\%\text{Linearity} = \left(\frac{R_1 R_L}{R_1 R_L + R_1 R_2 + R_2 R_L} - \frac{R_1}{R_p} \right) \times 100\%$$

Potentiometer

Ex. Plot the transfer curve and determine endpoint linearity of a 1 kΩ potential driving a 5 kΩ load, powered from a 10 V source.

Solution here, we have $V_{desired} = \frac{R_1}{R_p} V_{in} = \frac{R_1}{1000\,\Omega} \times 10\text{ V}$ $\qquad V_{\text{full scale}} = V_{in} = 10\text{ V}$

$$V_{actual} = \frac{R_1 \times 5000\,\Omega}{R_1 \times 5000\,\Omega + R_1 \times (1000\,\Omega - R_1) + (1000\,\Omega - R_1) \times 5000\,\Omega} \times 10\text{ V}$$

Table: Nonlinearity of a potential caused by loading

R_1 (Ω)	R_2 (Ω)	$V_{desired}$ (V)	V_{actual} (V)	Linearity (%FSO)
0	1000	0.0	0.000	0.00
50	950	0.5	0.495	0.05
100	900	1.0	0.982	0.18
150	850	1.5	1.463	0.37
200	800	2.0	1.938	0.62
250	750	2.5	2.410	0.90
300	700	3.0	2.879	1.21
350	650	3.5	3.348	1.52
400	600	4.0	3.817	1.83
450	550	4.5	4.288	2.12
500	500	5.0	4.762	2.38
550	450	5.5	5.241	2.59
600	400	6.0	5.725	2.75
650	350	6.5	6.217	2.83
700	300	7.0	6.718	2.82
750	250	7.5	7.229	2.71
800	200	8.0	7.752	2.48
850	150	8.5	8.289	2.11
900	100	9.0	8.841	1.59
950	50	9.5	9.411	0.89
1000	0	10.0	10.000	0.00

Potentiometer

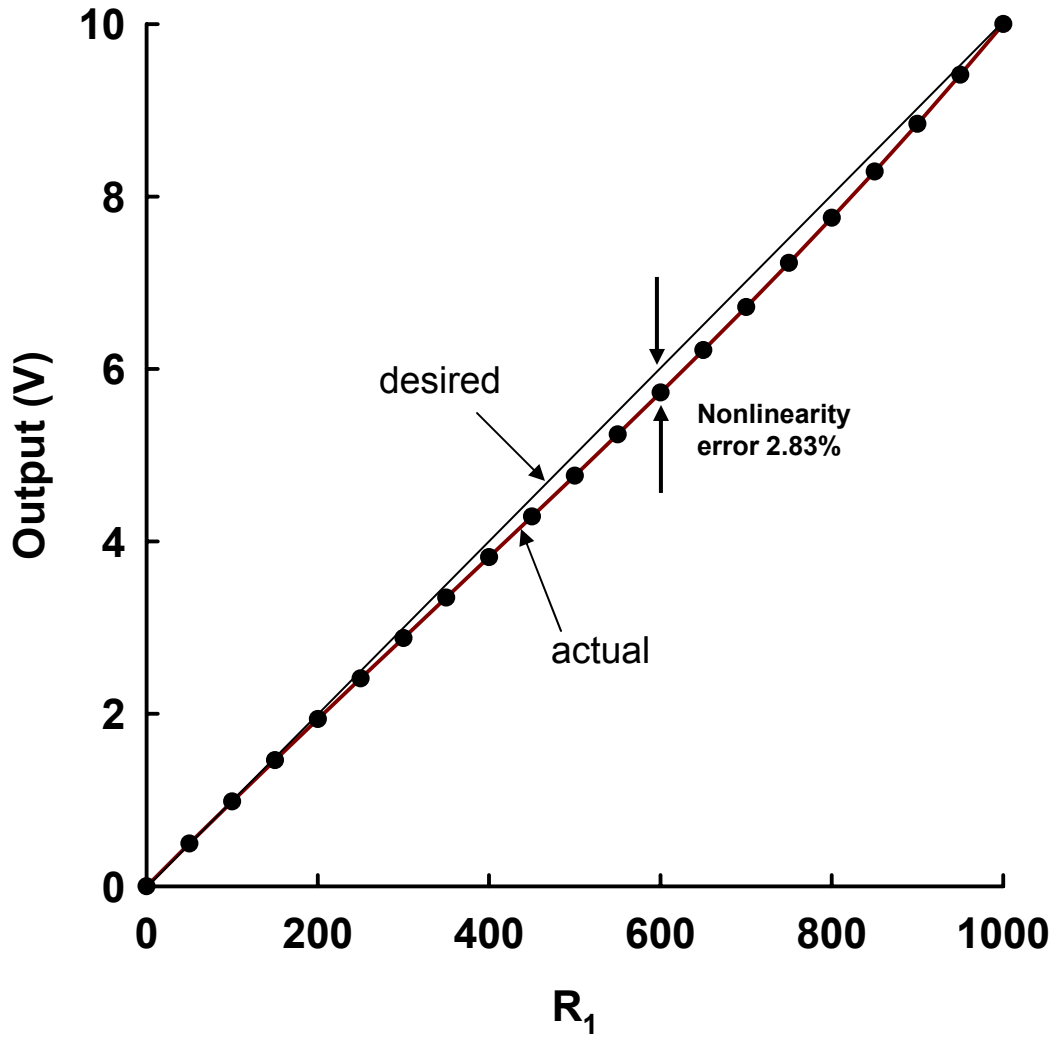

Linearity = 2.83 %FSO at 650 Ω

Potentiometer

Plot of %linearity vs R_1/R_p as a function of R_L/R_p

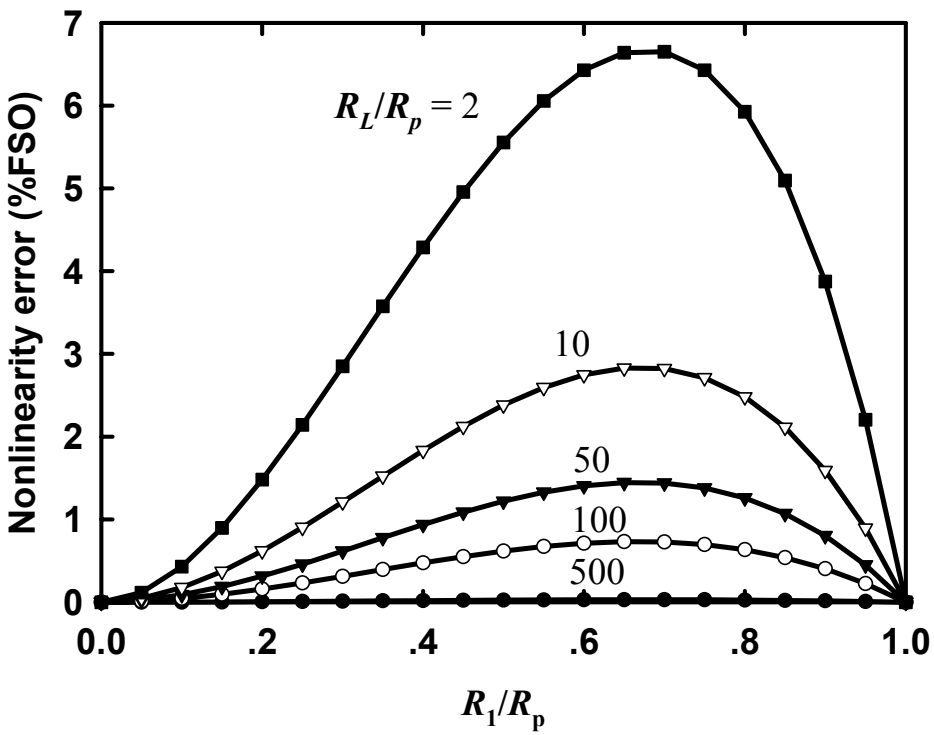

Loading effects on the nonlinearity of a potentiometer

Max Error (%)	$\frac{R_L}{Rp}$
10	1.263
5	2.742
1	14.590
0.5	29.410
0.1	147.900
0.05	296.100

Linear Variable Differential Transformer (LVDT)

LVDT – an electromechanical device that produce an electrical output proportional to the displacement of a separate movable core

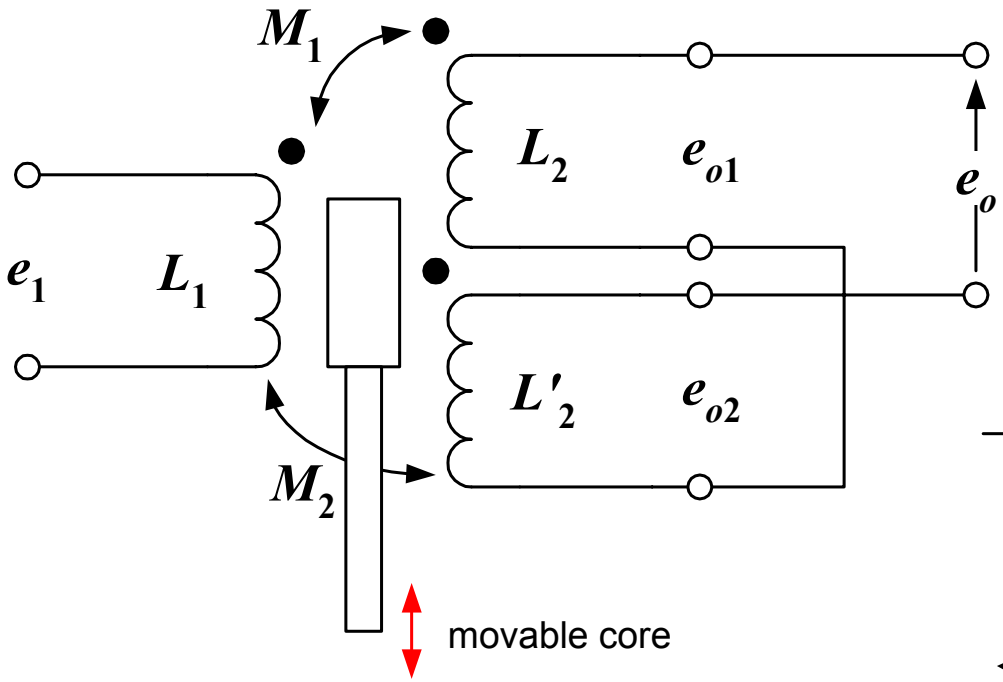

Circuit diagram for an LVDT. The secondary windings are normally connected in series opposition.

$$e_o = e_{o1} - e_{o2}$$

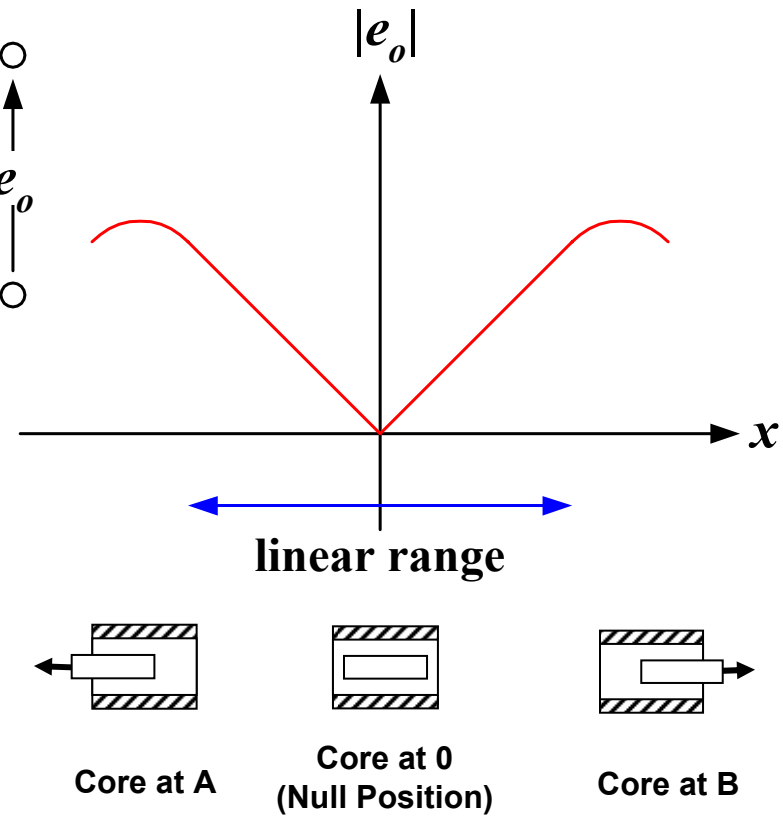

Output voltages for a series-opposition connected LVDT.

Linear Variable Differential Transformer (LVDT)

The output voltage is linear function of core position as long as the motion of the core is within the operating of the LVDT. The direction of motion can be determined from the phase of the output voltage relative to the input voltage (primary coil)

Advantage

- Frictionless (no physical contact between the movable core and coil structure)
- Theoretical infinite resolution, resolution limited by the external electronics
- Isolation of exciting input and output (transformer action)

Linear Variable Differential Transformer (LVDT)

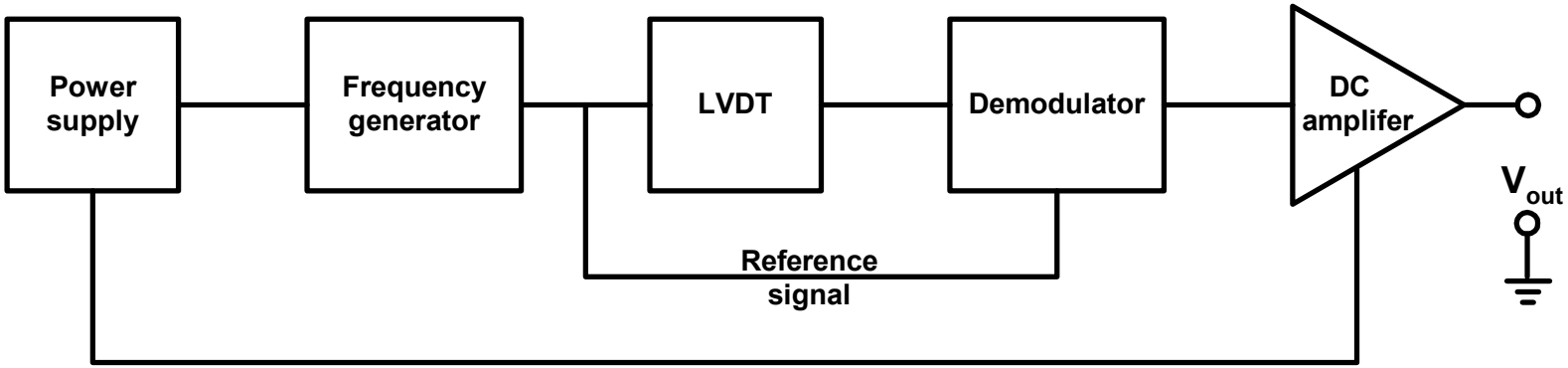

Block diagram of the readout circuit for an LVDT

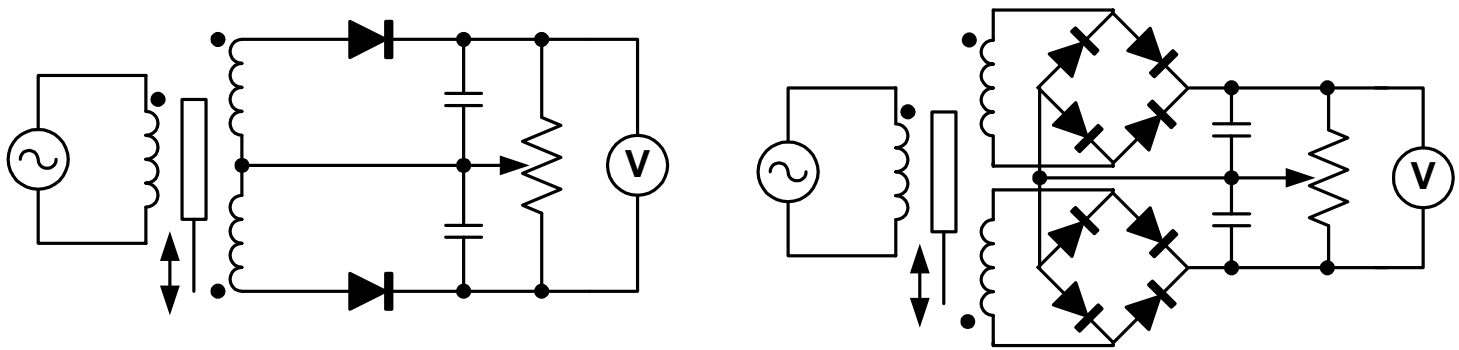

$$V_{out} = V_1(DC) - V_2(DC)$$

Phase sensitive demodulator based on (a) a half-wave rectifier and (b) full-wave rectifier

Linear Variable Differential Transformer (LVDT)

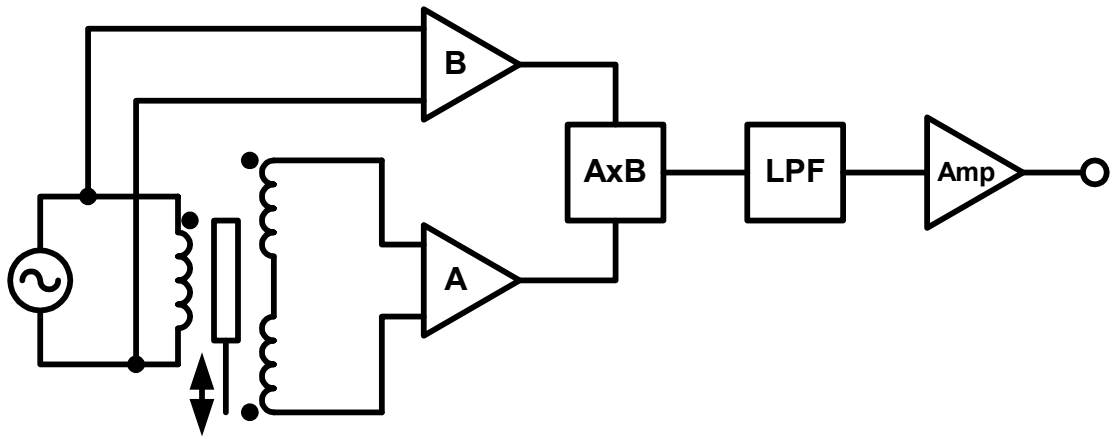

Assume the displacement varies with in the limited band.

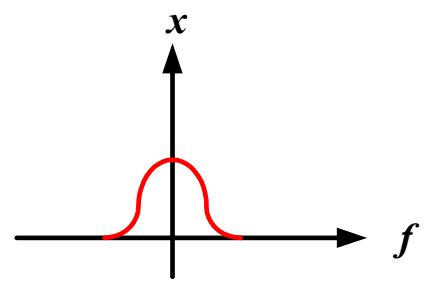

Phase sensitive demodulator based on carrier multiplication

$$x = x(t)$$

$$S_{\mathrm{A}} = x(t) K \sin 2\pi f_c t$$

$$S_{\mathrm{B}} = a \sin 2\pi f_c t$$

$$S_{\mathrm{AxB}} = aKx(t)\left(\sin 2\pi f_c t\right)^2 = \frac{aKx(t)\left(1 - \cos 4\pi f_c t\right)}{2}$$

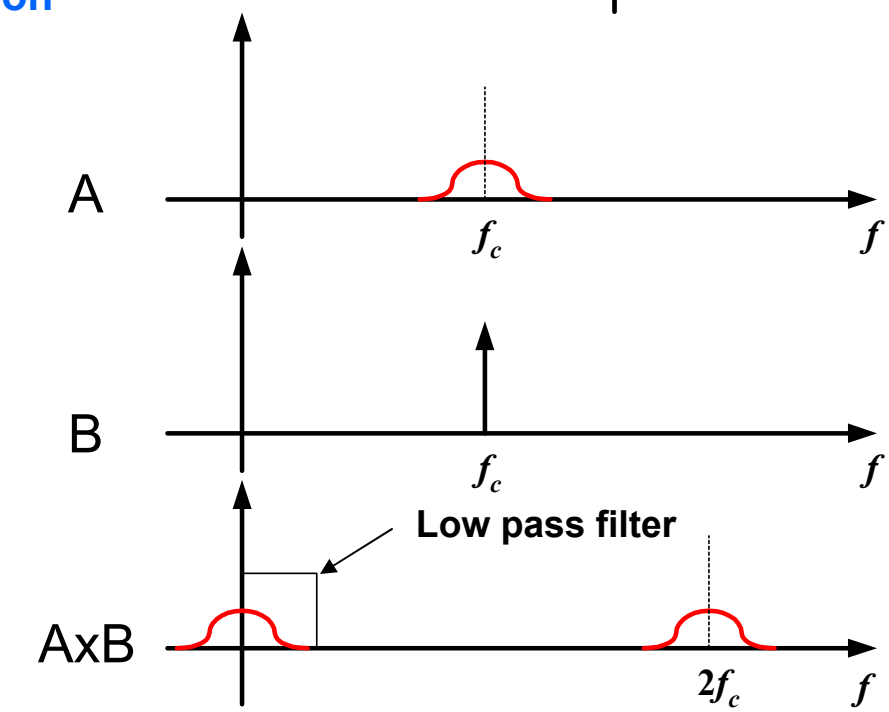

Optical Encoder

- Incremental optical encoder provides a pulse each time the shaft has rotated a defined distance (fast application: velocity)

- Absolute optical encoder provides a output code (Gray, binary or BCD) corresponding to the angular position. These codes are derived from independent tracks on the encoder disk corresponding to photodetectors. (slow application)

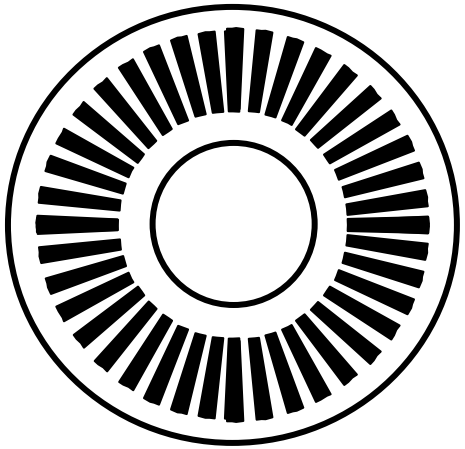

Incremental optical encoder

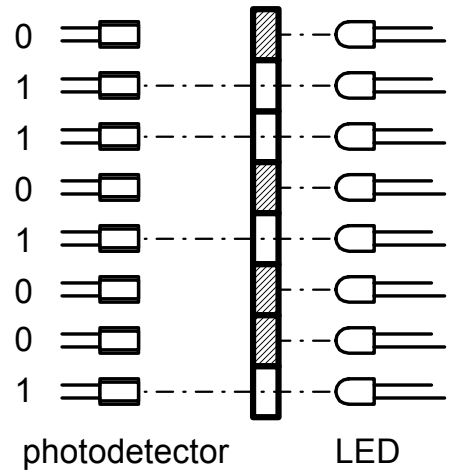

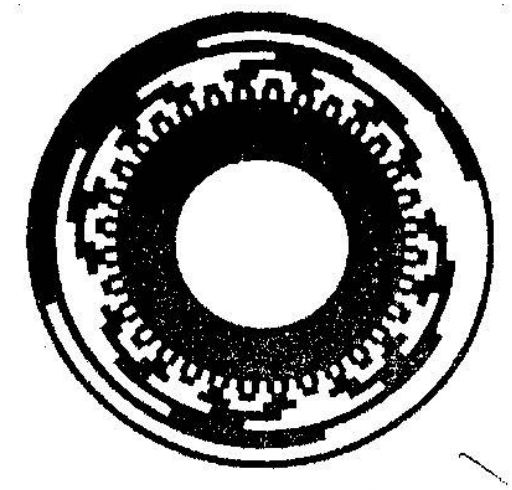

Absolute optical encoder

Optical Encoder

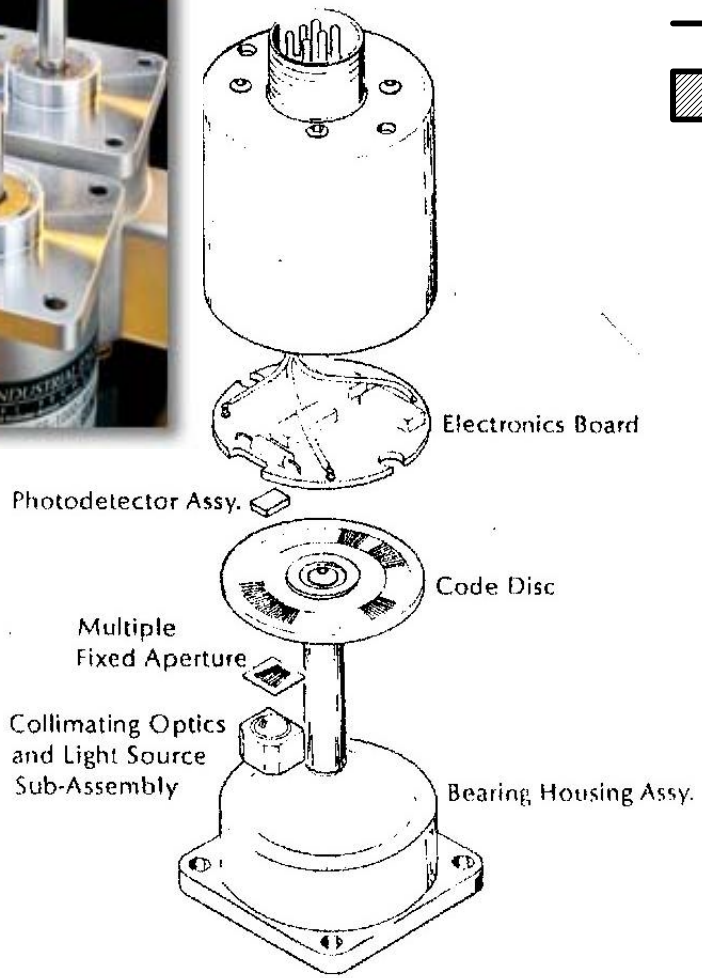

Incremental optical encoder

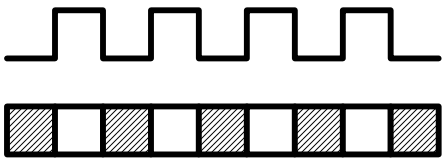

Tachometer encoder
output and code track

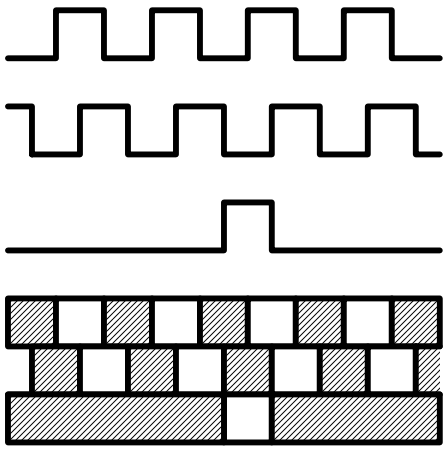

Quadrature encoder
outputs and code tracks

Force Transducer: Strain Gages

Strain (ε) is defined as a fractional change in length of a body due to an applied force.

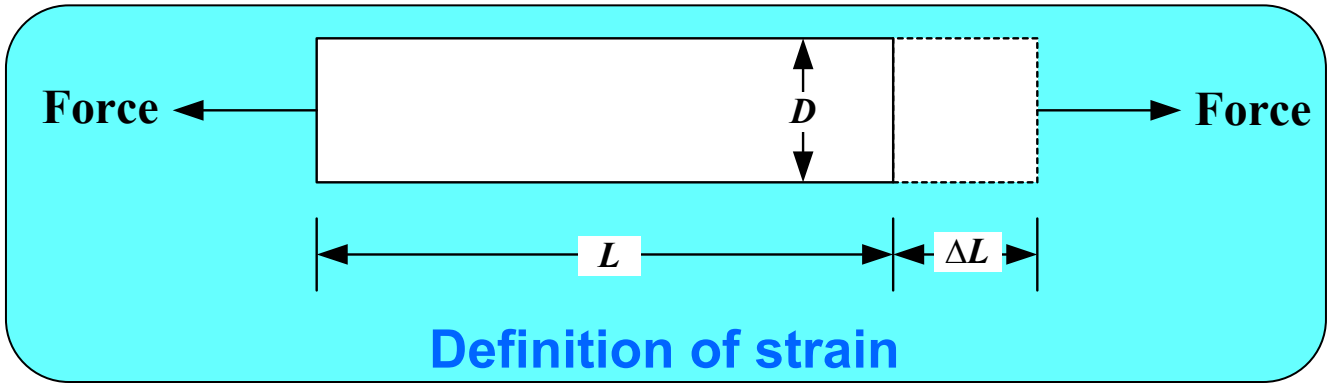

Strain can be positive: tensile or negative strain: compressive. The practical unit is microstrain ($\mu\varepsilon$), which is ε x 10^{-6}.

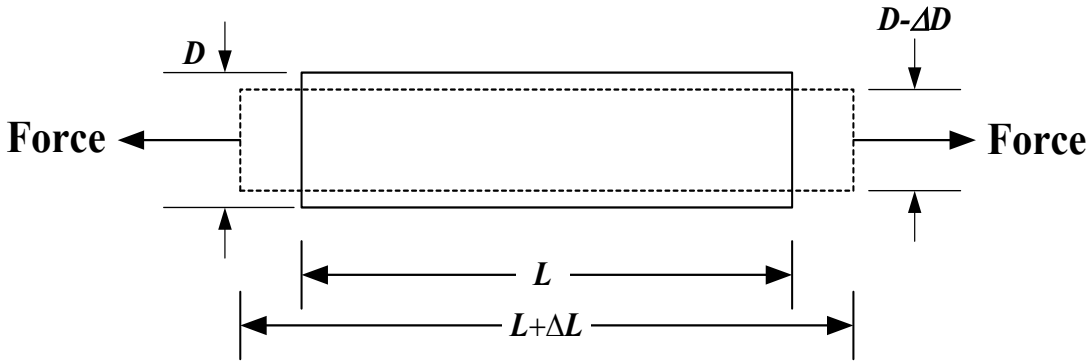

$$\nu = -\frac{\varepsilon_t}{\varepsilon} = -\frac{\Delta D / D}{\Delta L / L}$$

When a bar is strained with a uniaxial force, a phenomenon known as Poisson strain causes the bar diameter, D to contract in transverse direction. The magnitude of this contraction is a material property indicated by its Poisson's Ratio, ν

For most metal: $\nu \sim 0.3$, polymer: $\nu > 0.3$

σ - ε Curve, Brittle and Ductile materials

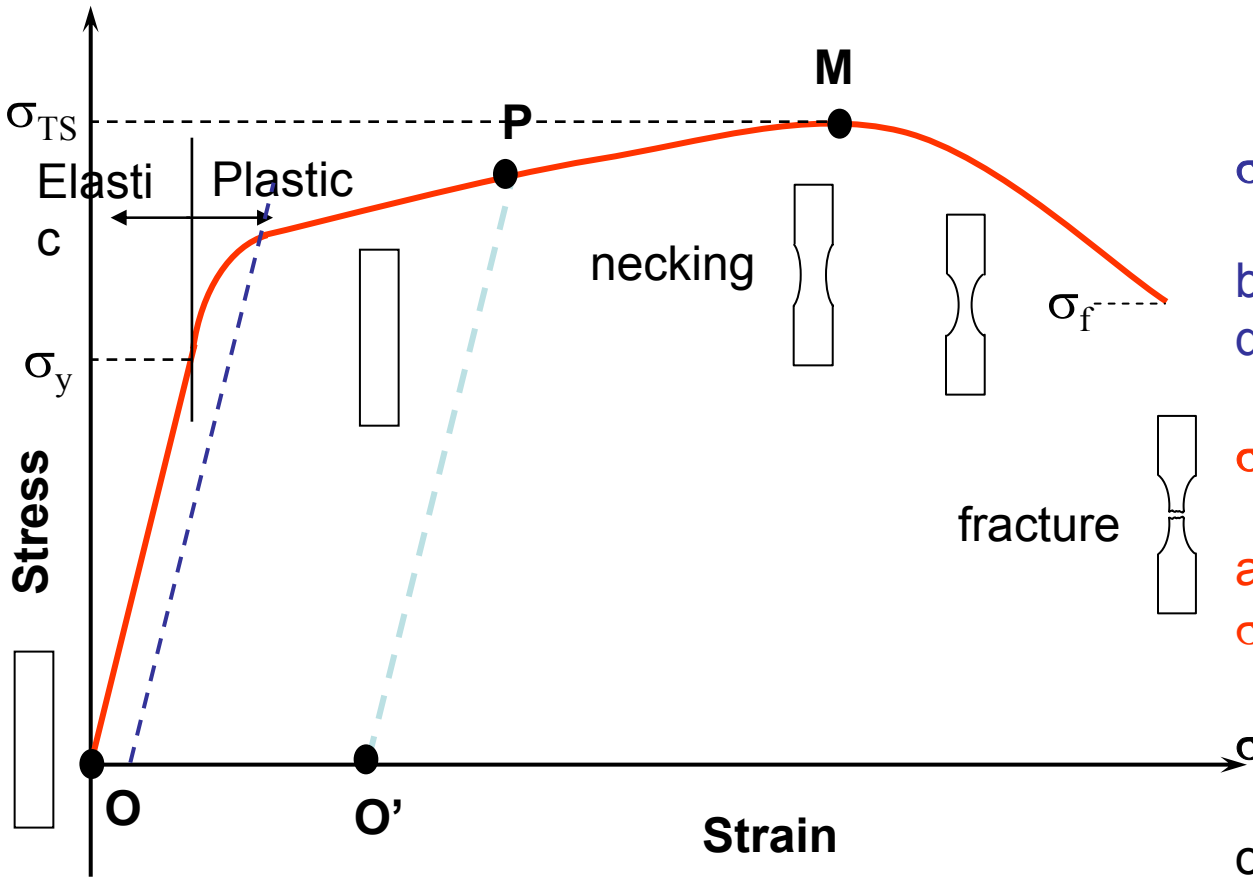

σ_y –Yield strength
The maximum stress before the plastic deformation occurs.

σ_{TS} –tensile strength
The maximum stress at
σ - ε curve

σ_f –fracture strength
The stress at instance of fracture

Typical σ - ε curve from a tensile test on a ductile polycrystalline metal (e.g. aluminum alloys, brasses, bronzes, nickel etc.)

Strain Gages: Derivation of Gage Factor

Strain gage is a device whose electrical resistance varies in proportion to the amount to of strain the device. (discovery by Lord Kelvin in 1856)

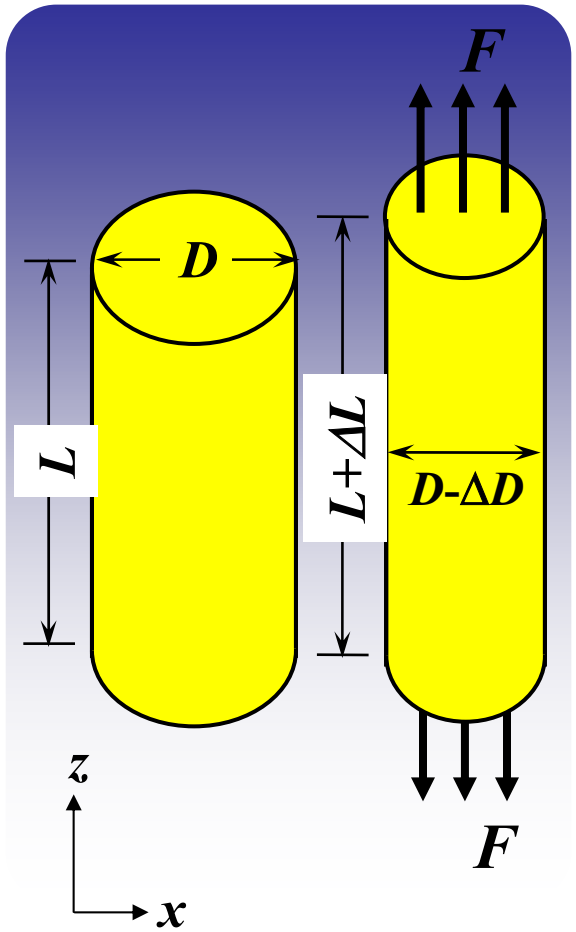

The electric resistance of a wire having length l, cross section A, and resistivity ρ is

$$R = \rho \frac{l}{A}$$

The change of R can be affected by three quantities, and is given by

$$\frac{dR}{R} = \frac{d\rho}{\rho} + \frac{dL}{L} - \frac{dA}{A}$$

Consider a wire under an applied force F within the elastic limit, for a wire with a diameter D

$$A = \frac{\pi D^2}{4} \longrightarrow \frac{dA}{A} = 2\frac{dD}{D} = -2\nu\frac{dL}{L}$$

Therefore the geometry change results in the R change as follows

$$\frac{dR}{R} = (1+2\nu)\frac{dL}{L} + \frac{d\rho}{\rho}$$

Derivation of Gage factor: continue

Sensitivity of a strain gage: Gage factor (K) is defined as

$$K = \frac{dR/R}{dL/L} = \frac{dR/R}{\varepsilon} = \underbrace{1+2v}_{\text{Geometrical change}} + \underbrace{\frac{d\rho/\rho}{\varepsilon}}_{\text{Strain dependence of resistivity}}$$

Note: The change in resistivity as a result of a mechanical strain is called ***piezoresistive effect*.**

Therefore, the resistance of the strain gage under an applied force is

$$R = R_0 + dR = R_0\left(1+\frac{dR}{R_0}\right) = R_0\left(1+K\varepsilon\right)$$

where R_0 is the resistance where there is no applied stress

Strain Gage

Ex A strain gage is bonded to a steel beam which is 10.00 cm long and has a cross-sectional area of 4.00 cm^2. Young's modulus of elasticity for steel is 20.7×10^{10} N/m^2. The strain gage has a nominal (unstrained) resistance of 240 Ω and a gage factor 2.20. When a load is applied, the gage's resistance changes by 0.013 Ω. Calculate the change in length of steel beam and the amount of force applied to the beam.

SOLUTION

$$K = \frac{\Delta R / R}{\Delta L / L}$$

$$\Delta L = \frac{L}{K}\left(\frac{\Delta R}{R}\right) = \frac{0.1\,\text{m}}{2.20} \times \frac{0.013\,\Omega}{240\,\Omega} = 2.46 \times 10^{-6}\ \text{m}$$

From $\sigma = E\varepsilon$ where $\varepsilon = \dfrac{\Delta L}{L}$ and $\sigma = \dfrac{F}{A}$

Therefore $\dfrac{F}{A} = E\dfrac{\Delta L}{L}$ or $F = E\dfrac{\Delta L}{L}A$

$$A = 4\,\text{cm}^2 \times \frac{1\,\text{m}^2}{10^4\ \text{cm}^2} = 4 \times 10^{-4}\,\text{m}^2$$

$$F = 20.7 \times 10^{10}\,\frac{\text{N}}{\text{m}^2} \times \frac{2.46 \times 10^{-6}\,\text{m}}{0.1\,\text{m}} \times 4 \times 10^{-4}\,\text{m}$$

$$= 2.037 \times 10^3\ \text{N}$$

Strain Gage

Ideally, we would prefer the strain gage to change resistance only in respect to the stress-induced strain in the test specimen, but the resistivity and the strain sensitivity of all known strain sensitive materials vary with temperature.

The resistance of a conductor at a given temperature, *T* is

$$R_T = R_{T0}(1 + \alpha_0 \Delta T)$$

Where R_{T0} is the resistance at the reference temperature T_0 , α_0 is the temperature coefficient and ΔT is the change in temperature from T_0

Ex Calculate the change in resistance caused by a 1°C change in temperature for the strain gage in the previous example. The temperature coefficient α_0 for most metals is 0.003925/°C.

SOLUTION

$$\Delta R = (0.003925/^\circ\,\mathrm{C})(1^\circ\,\mathrm{C})(240\,\Omega) = 0.942\,\Omega$$

But the stress applied by the load in the previous example caused only a 0.0013 Ω change in the strain gage's resistance.

$$\frac{\Delta R_{Temp}}{\Delta R_{stress}} = \frac{0.942\,\Omega}{0.013\,\Omega} = 72.5$$

Therefore, it is necessary to compensate for temperature effect on the strain gage

Wheatstone Bridge: Deflection Method

Wheatstone bridges are often used in the deflection mode: This method measures the voltage difference between both dividers or the current through a detector bridging them.

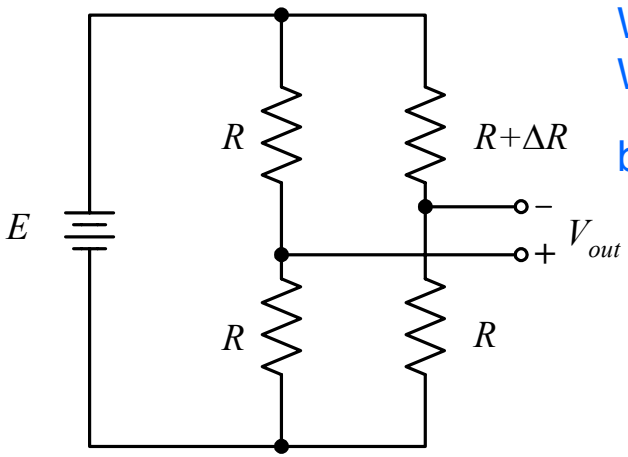

With no stress ΔR = 0, all four resistors are equal, so V_{out} = 0. When stress is applied, the strain gage changes its resistance by ΔR

$$V_{out} = \frac{R}{R+R}E - \frac{R}{R+(R+\Delta R)}E$$

$$= \frac{\Delta R}{4R+2\Delta R}E$$

While ΔR is typically 0.01 Ω, so in practice $R >> \Delta R$

$$V_{out} \approx \frac{\Delta R}{4R}E$$

$$V_{out} \approx \frac{KE}{4}\varepsilon$$

Temperature Compensation

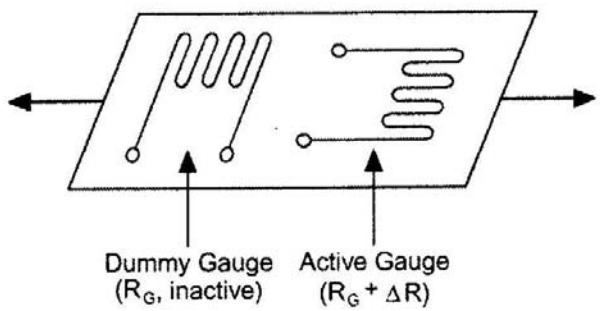

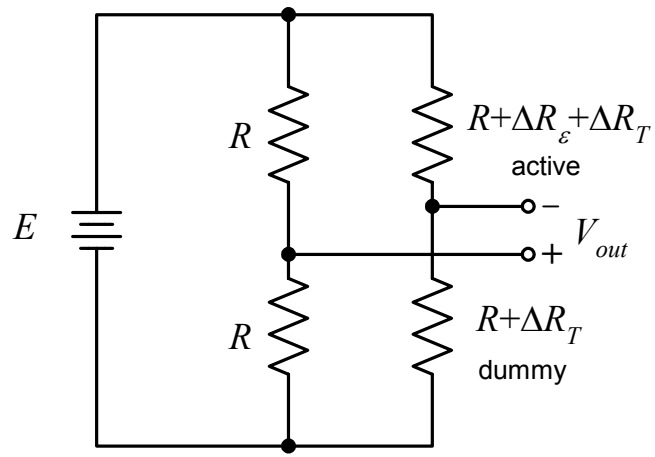

Placement of active and dummy gages for temperature compensation

Ex Determine V_{out} given that R_0 = 240 Ω, E = 10 V and
(a) Stress cause the upper resistor (the active gage) on the right to increase by 0.013 Ω.
(b) Temperature causes both resistors (active and dummy) on the right to increase by 9.4 Ω.
(c) Stress cause the active gage to increase by 0.013 Ω and temperature both resistors to increase by 9.4 Ω.

SOLUTION (a)

$$V_{out} = \frac{\Delta R}{4R} E = \frac{(0.013\Omega)(10\text{ V})}{4(240\Omega)} = 0.13\text{ mV}$$

The stress produces a rather small signal.

Temperature Compensation

(b) Using the voltage-divider give us

$$V_{out} = \frac{(240\,\Omega)(10\text{ V})}{(240\,\Omega + 240\,\Omega)} - \frac{(249.4\,\Omega)(10\text{ V})}{(249.4\,\Omega + 249.4\,\Omega)}$$
$$= 5\text{ V} - 5\text{ V} = 0\text{ V}$$

The use of a dummy gage eliminates the effect of temperature.

(c) With both a temperature and a stress-induced resistance change,

$$V_{out} = \frac{(240\,\Omega)(10\text{ V})}{(240\,\Omega + 240\,\Omega)} - \frac{(249.4\,\Omega)(10\text{ V})}{(249.4\,\Omega + (249.4\,\Omega + 0.013\,\Omega)}$$
$$= 5\text{ V} - 4.99987\text{ V} = 0.13\text{ mV}$$

So even in the presence of both stress and temperature resistance changes, the use of a dummy gage eliminates the effect of the temperature change

Strain gage arrangements

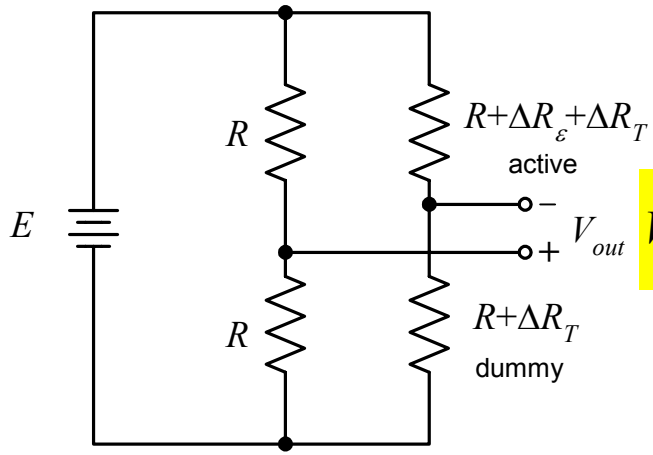

$$V_{out} \approx \frac{\Delta R}{4R} E$$

Single active strain gage

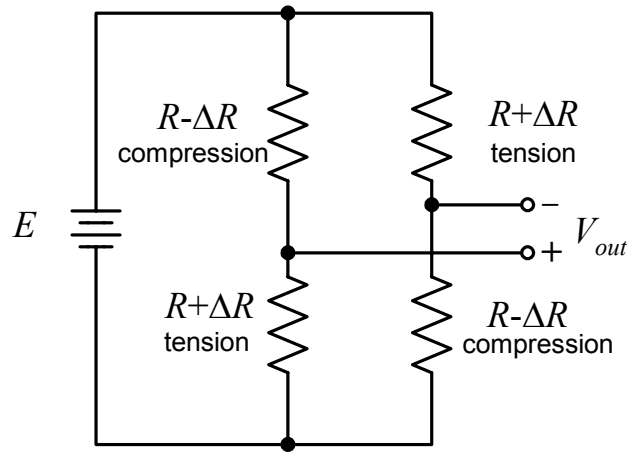

$$V_{out} \approx \frac{\Delta R}{R} E$$

Four active strain gage (Full bridge)

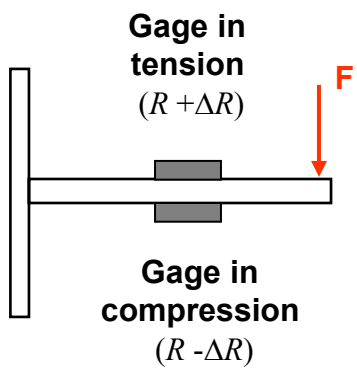

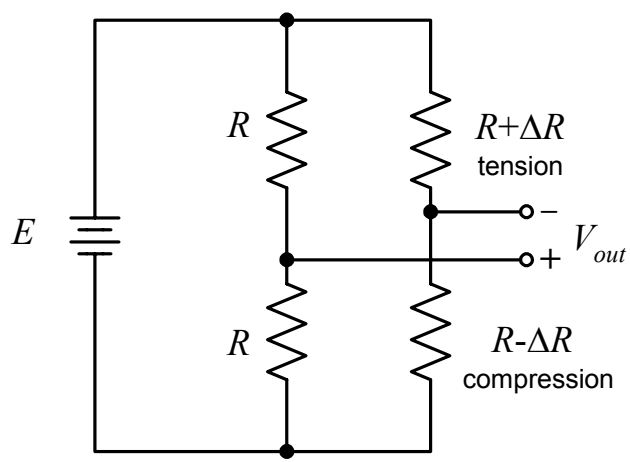

$$V_{out} \approx \frac{\Delta R}{2R} E$$

Two active strain gage (Half bridge)

Effect of Lead Wire Resistance

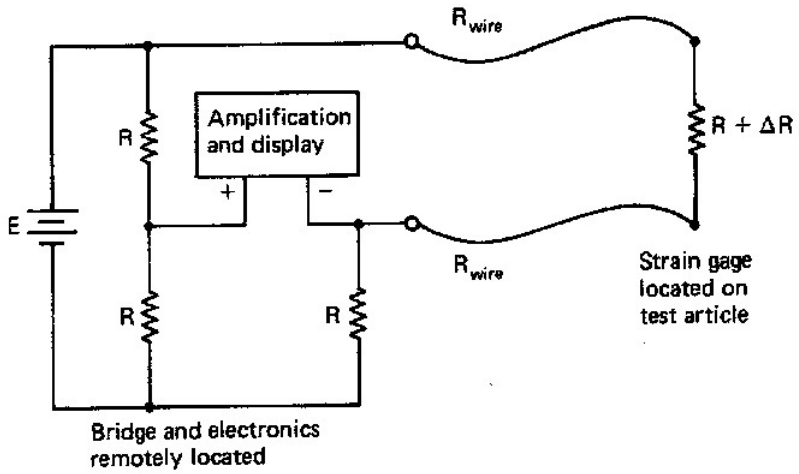

(a)

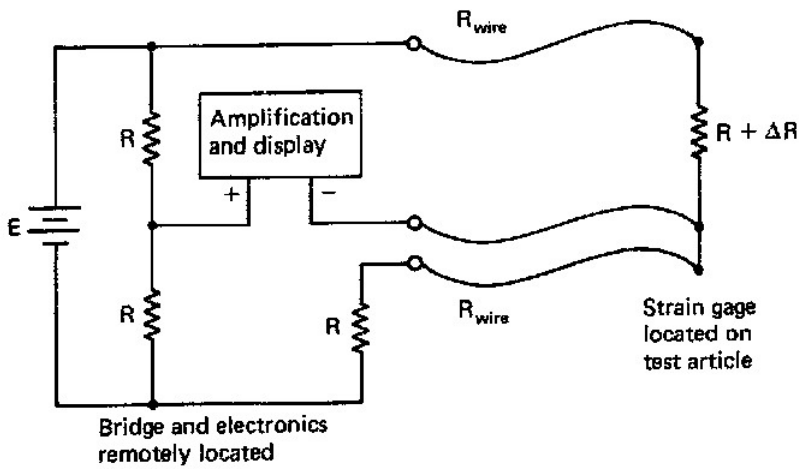

(b)

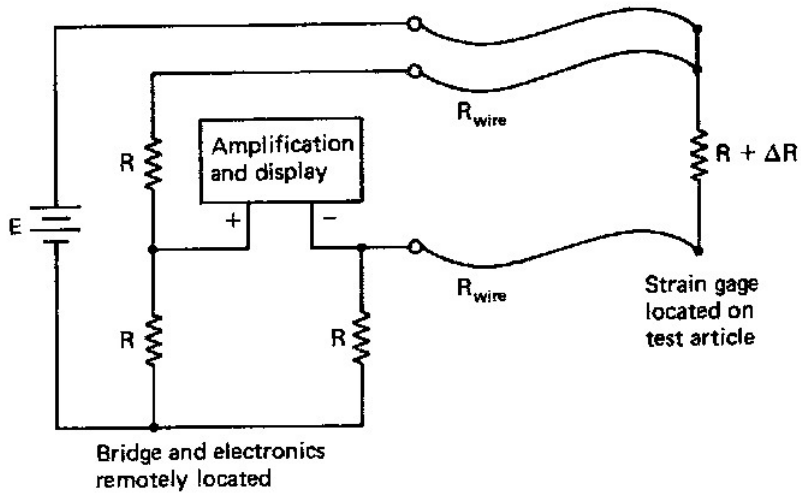

(c)

Effect of Lead Wire Resistance: Defection method

sensitivity

In strain gage application, we can write

$$V_o \approx \frac{V_r}{4}\frac{\Delta R}{R}$$

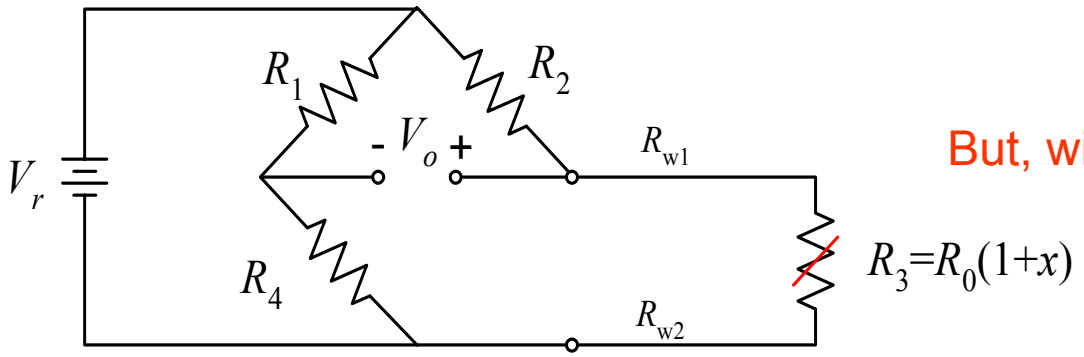

Two-wire connections of Quarter-Bridge Circuit

But, with lead wire, $R_3 = R_0+2R_W$

$$\frac{\Delta R}{R} = \frac{\Delta R}{R_0+2R_W} = \frac{\Delta R}{R_0}\left(\frac{1}{1+2R_W/R_0}\right)$$

desensitivity

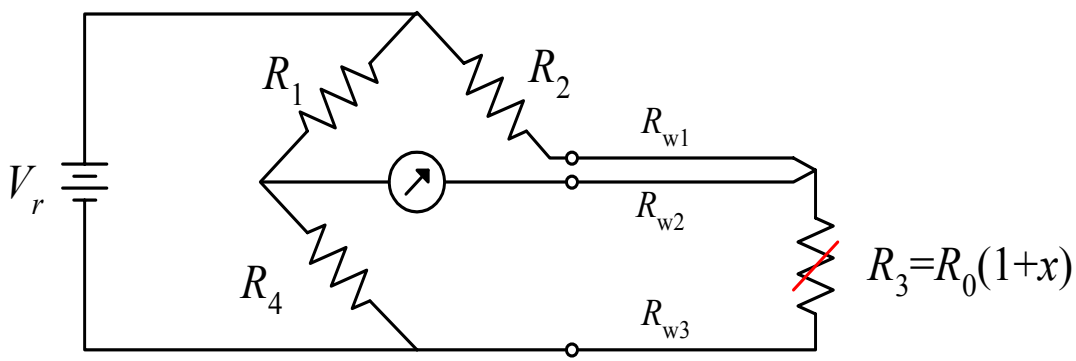

$$\frac{\Delta R}{R} = \frac{\Delta R}{R_0+R_W} = \frac{\Delta R}{R_0}\left(\frac{1}{1+R_W/R_0}\right)$$

desensitivity

Therefore, with three-wire connection the reduction in sensitivity is smaller.

Siemens or Three-wire connections of Quarter-Bridge Circuit

Effect of Lead Wire Resistance: Defection method

Temperature effect

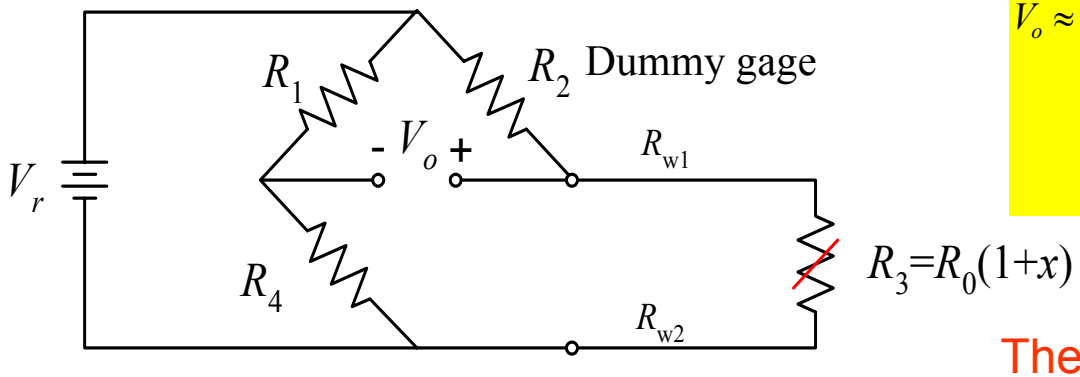

Two-wire connections of Quarter-Bridge Circuit

$$V_o \approx \frac{V_r}{4}\frac{\Delta R}{R} = \frac{V_r}{4}\left(\left.\frac{\Delta R_3}{R_3+2R_w}\right|_{\varepsilon} + \left.\frac{\Delta R_3}{R_3+2R_w}\right|_{T} + \left.\frac{2\Delta R_w}{R_3+2R_w}\right|_{T} - \left.\frac{\Delta R_2}{R_2}\right|_{T}\right)$$

The detrimental effect resulting from lead wires is loss of temperature compensation

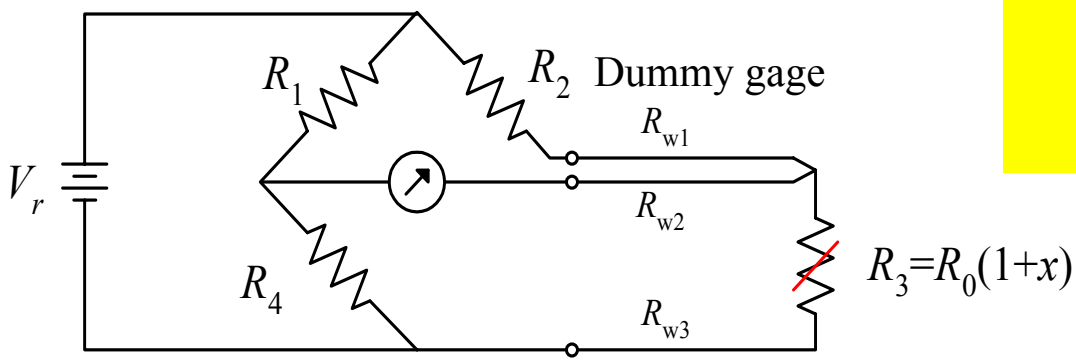

$$V_o \approx \frac{V_r}{4}\frac{\Delta R}{R} = \frac{V_r}{4}\left(\left.\frac{\Delta R_3}{R_3+R_w}\right|_{\varepsilon} + \left.\frac{\Delta R_3}{R_3+R_w}\right|_{T} + \left.\frac{\Delta R_w}{R_3+R_w}\right|_{T} - \left.\frac{\Delta R_2}{R_2+R_w}\right|_{T} - \left.\frac{\Delta R_w}{R_2+R_w}\right|_{T}\right)$$

The detrimental effect of long lead wires can be reduced by employing the three-wire system

Siemens or Three-wire connections of Quarter-Bridge Circuit

Load Cell

The performance of strain gage depends heavily on the installation, the proper alignment with an applied force, gage adhesion with the specimen etc.

Load cell – a force transducer consists of a beam with properly mounted strain gages (usually four)

Load cell specifications

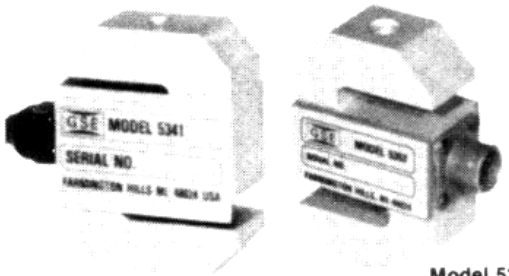

Model 5341

Model 5353

The Model 5341, 5353 and 5354 load cells are very accurate strain gage sensors used for weighing and force measurement. Their high accuracy makes them ideally suited for critical weighing applications. The 5353 and 5354 Models are sealed devices that offer the durability and ruggedness required of units used in production environments. The Model 5341 is a lower range unit intended for controlled environments.

Model	Capacity Lbs.	Material
5341	25, 50	Aluminum
5353	500, 1,000	Aluminum
5353	2,000 5,000	Steel
5354	100, 200	Aluminum

Specifications

Output at rated capacity	2mv/v nominal
Overload rating	50% FS
Nonlinearity	± 0.05% FS
Bridge resistance	350 ohms nominal
Compensated temperature range	+ 25°F-125°F
Operating temperature range	0 - 200°F
Temperature effect on zero	± 0.002% FS per°F
Temperature effect on span	± 0.002% of reading per°F
Recommended Excitation	10 V.D.C.

Specifications are for tension loading.

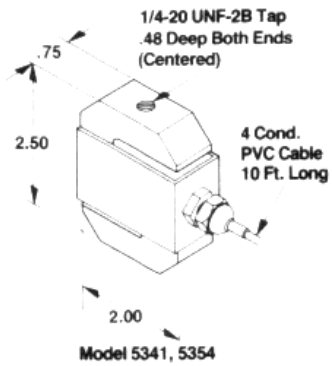

Model 5341, 5354

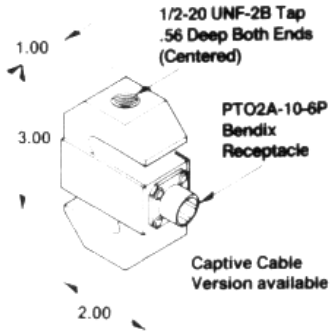

Model 5353 with Connector

Load Cell

Ex A GSE5352 load cell has a full-scale rating of 500 lb.
(a) What is the recommended excitation voltage?
(b) Using that excitation, what is the output voltage per pound?
(c) What is the nonlinearity in pounds?
(d) What is the zero shift (in pounds) if the temperature varies across its rated range?

SOLUTION

(a) The manufacturer recommends a 10-V dc excitation

(b) $$V_{\text{out(max)}} = (\text{output at rated capacity})(V_{\text{excitation}}) = (2\ \text{mV/V})(10\ \text{V}) = 20\ \text{mV}$$

This is for 500 lb: $V_{\text{out/lb}} = V_{\text{out/lb}}/\text{full-scale load} = 20\ \text{mV}/500\ \text{lb} = 40\ \mu\text{V/lb}$

This means that your electronics must be able to clearly and accurately amplify differential signals of 40 μV or less if you expect to resolve and display 1-lb increments.

(c) $$\text{Nonlinearity} = (\pm 0.05\%)(500\ \text{lb}) = \pm 0.25\ \text{lb}$$

So no matter how good your electronics, there will be a ±0.25-lb uncertainty.

(d) The temperature range is +25 to +125°F. This represents a 100°F shift. This zero shift with temperature is +0.002% FS/°F

$$\text{Zero shift} = (+0.02\%/^{\circ}\text{F})(100^{\circ}\text{F})(500\ \text{lb}) = +1\ \text{lb}$$

So if the transducer experience significant changes in temperature, you must readjust zero.